# SRM-3611TL (U65140000001-)



## Dokumenter


001 CYLINDER, PISTON, CRANKSHAFT

002 VALVE, CAM

003 MAGNETO

004 CLUTCH

005 AIR CLEANER, CARBURETOR

006 CARBURETOR

007 FUEL TANK

008 MUFFLER

009 RECOIL STARTER, PULLY

010 GEAR CASE, SHIELD

011 MAIN PIPE, HANDLE

012 THROTTLE

013 ACCESSORIES




Copyright YAMABIKO EUROPE SA

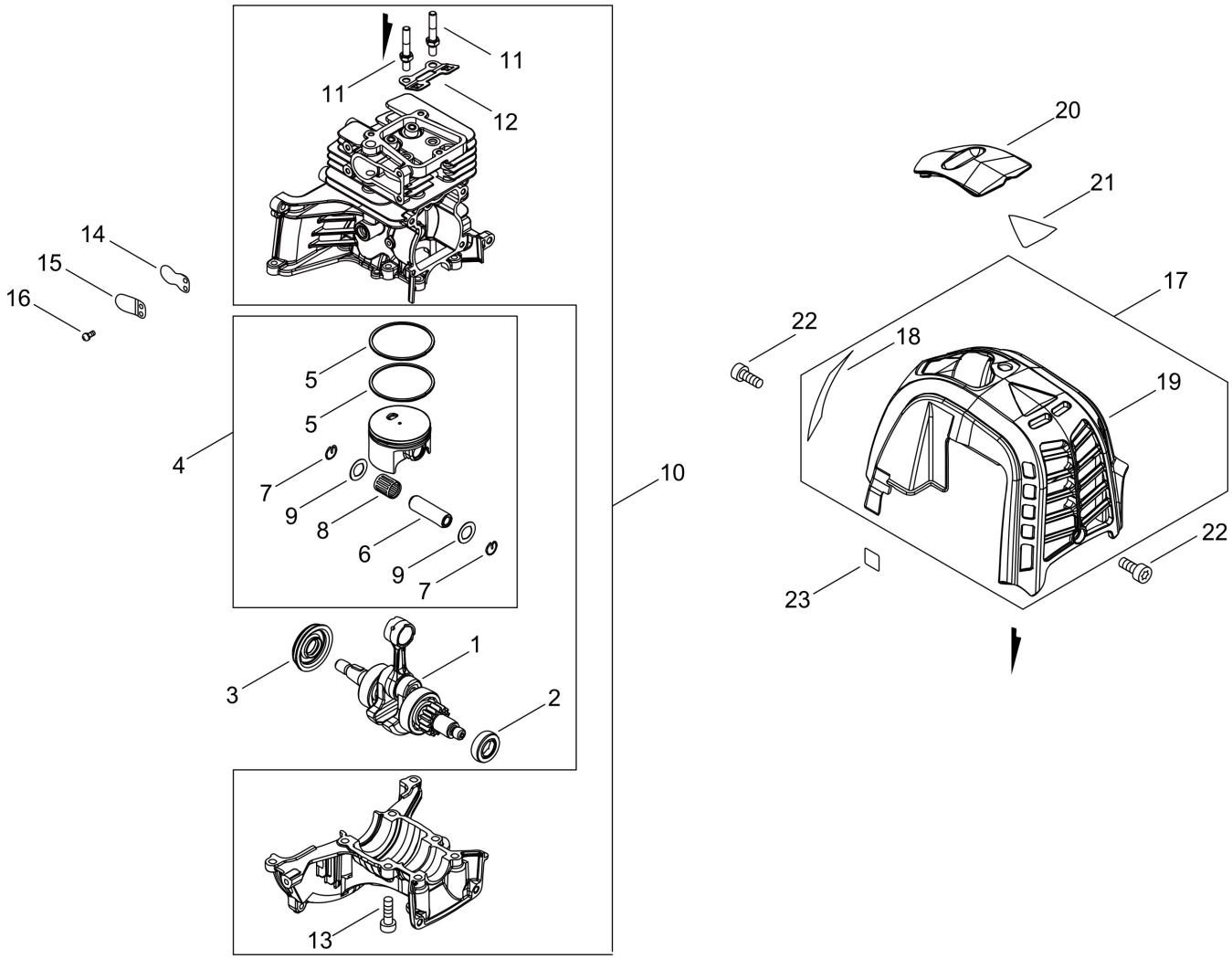



Copyright YAMABIKO EUROPE SA

# Illustration 001 CYLINDER, PISTON, CRANKSHAFT

| Nummer | Antal | Kode | Beskrivelse | Vedhæftet fil | Recommended Stock Item | Remark |
|---|---|---|---|---|---|---|
| 1 | 1 | A011001530 | CRANKSHAFT,ASY | | | Slow-moving |
| 2 | 1 | V505000020 | SEAL,OIL 12 | | | Slow-moving |
| 3 | 1 | V505000011 | SEAL,OIL 12 | | | Slow-moving |
| 4 | 1 | P100004740 | PISTON KIT | | | |
| 5 | 2 | A101000730 | RING, PISTON | | | Medium-moving |
| 6 | 1 | V608000000 | PIN,ENG 10 | | | Slow-moving |
| 7 | 2 | V580000010 | RING,END | | | Slow-moving |
| 8 | 1 | V555000010 | BEARING,NEEDLE 10 | | | Medium-moving |
| 9 | 2 | V307000580 | WASHER,CIRCULAR 10 | | | Slow-moving |
| 10 | 1 | P100004730 | CYL. CRANKCASE SET | Y2021-718 | | |
| 11 | 2 | V223000080 | BOLT,STUD 5 | Y2021-718 | | Slow-moving |
| 12 | 1 | C562000110 | GUIDE,ROD | Y2021-718 | | Slow-moving |
| 13 | 8 | V805000250 | BOLT, TORX 5 | Y2021-718 | | Slow-moving |
| 14 | 1 | A211000021 | VALVE, REED | | | Slow-moving |
| 15 | 1 | A212000021 | GUIDE, VALVE | | | Slow-moving |
| 16 | 2 | 9134103006 | SCREW | | | |
| 17 | 1 | A160003390 | COVER,CYLINDER | | | Slow-moving |
| 18 | 1 | X502000390 | LABEL,ECHO | | | Slow-moving |
| 19 | 1 | A160003410 | COVER,CYLINDER | | | Slow-moving |
| 20 | 1 | A429000220 | COVER,CAP | | | Slow-moving |
| 21 | 1 | X530000590 | LABEL,EYE CATCHER | | | Slow-moving |
| 22 | 3 | V805000140 | BOLT, TORX 5 | | | Slow-moving |
| 23 | 1 | X524001901 | LABEL | | | Slow-moving |


Copyright YAMABIKO EUROPE SA

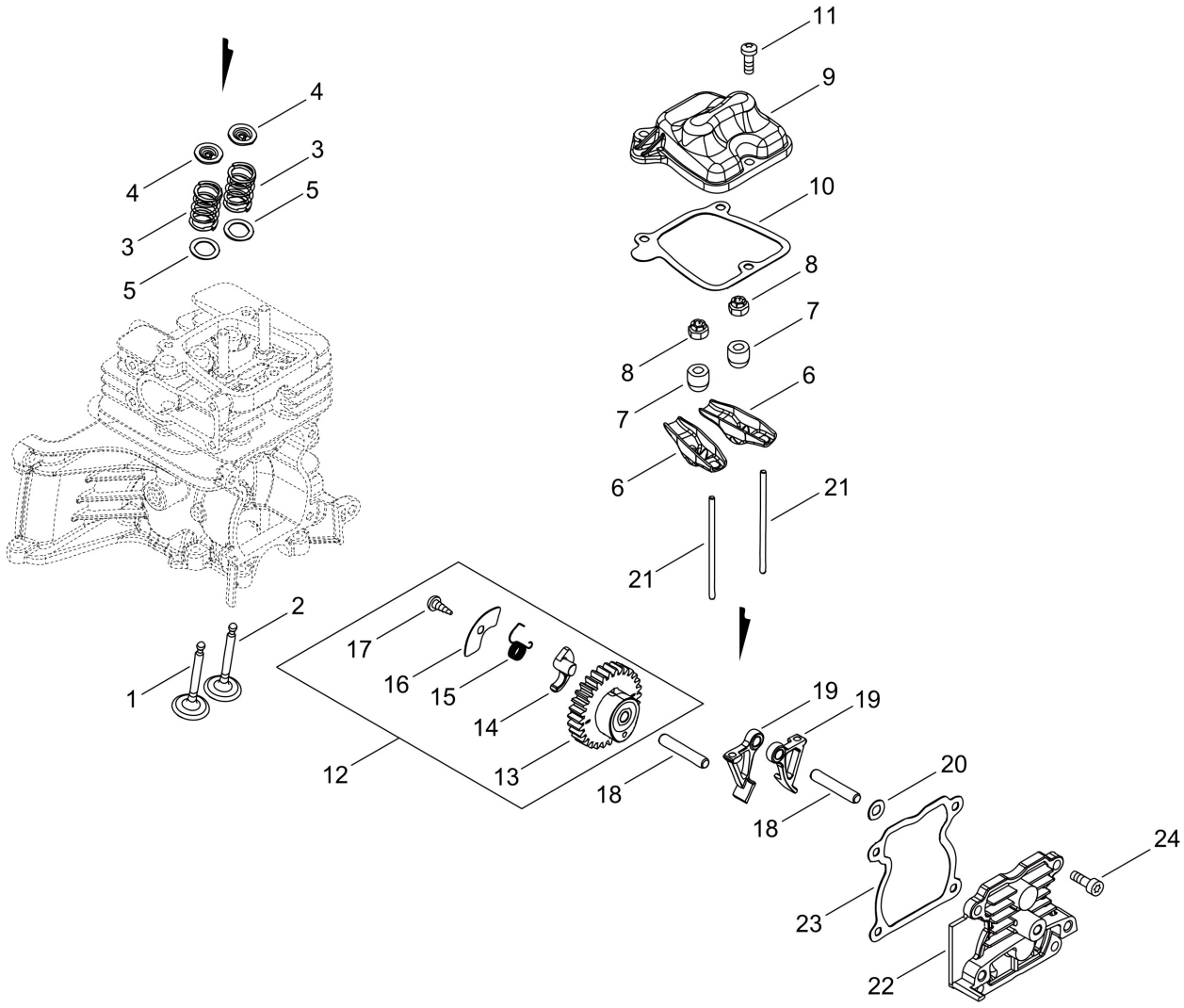



Copyright YAMABIKO EUROPE SA

# Illustration 002 VALVE, CAM

| Nummer | Antal | Kode | Beskrivelse | Vedhæftet fil | Recommended Stock Item | Remark |
|---|---|---|---|---|---|---|
| 1 | 1 | A603000090 | VALVE | | | Slow-moving |
| 2 | 1 | A603000100 | VALVE | | | Slow-moving |
| 3 | 2 | A604000030 | SPRING,VALVE | | | Slow-moving |
| 4 | 2 | A606000040 | RETAINER | | | Slow-moving |
| 5 | 2 | V392000030 | PLATE | | | Slow-moving |
| 6 | 2 | A610000090 | ARM,ROCKER | | | Slow-moving |
| 7 | 2 | V353000720 | COLLAR,5 | | | Slow-moving |
| 8 | 2 | V263000500 | NUT,5 | | | Slow-moving |
| 9 | 1 | A137000040 | COVER,ROCKER ARM | | | Slow-moving |
| 10 | 1 | V109000340 | GASKET | | | Fast-moving |
| 11 | 3 | V202000850 | BOLT,4 | | | Slow-moving |
| 12 | 1 | P100004750 | CAM GEAR ASY | | | |
| 13 | 1 | A622000020 | GEAR,CAM | | | Slow-moving |
| 14 | 1 | A146000020 | WEIGHT,DECOMP | | | Slow-moving |
| 15 | 1 | V452001800 | SPRING,TORSION | | | Medium-moving |
| 16 | 1 | C603000240 | PLATE | | | Slow-moving |
| 17 | 1 | V252000930 | SCREW,4 | | | Slow-moving |
| 18 | 2 | 90033050280 | ROLLER | | | |
| 19 | 2 | A600000020 | LIFTER | | | Slow-moving |
| 20 | 1 | V303000220 | WASHER | | | Slow-moving |
| 21 | 2 | A607000030 | ROD,PUSH | | | Slow-moving |
| 22 | 1 | P100004761 | COVER,CAM GEAR | | | Slow-moving |
| 23 | 1 | V109000040 | GASKET | | | Fast-moving |
| 24 | 4 | V804000050 | BOLT, TORX 4 | | | Slow-moving |


Copyright YAMABIKO EUROPE SA

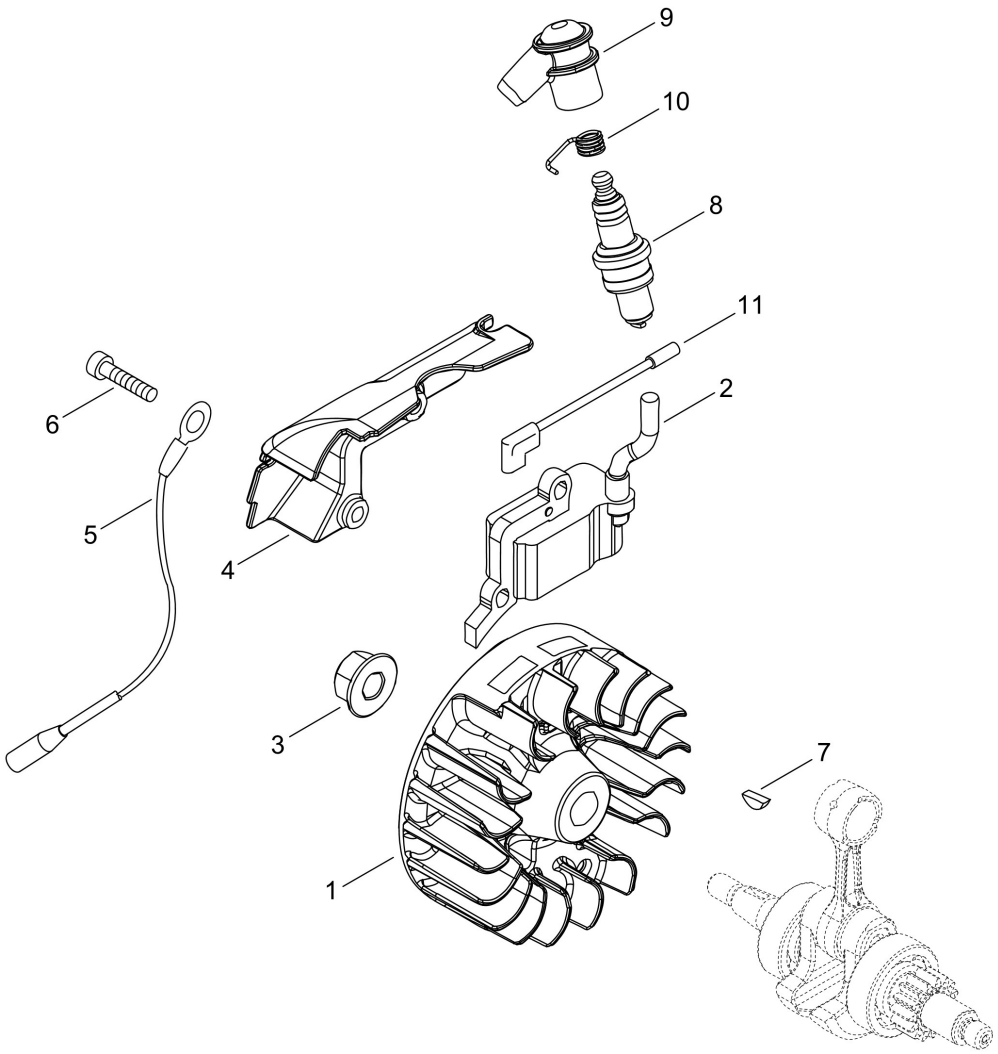



Copyright YAMABIKO EUROPE SA

# Illustration 003 MAGNETO

| Nummer | Antal | Kode | Beskrivelse | Vedhæftet fil | Recommended Stock Item | Remark |
|---|---|---|---|---|---|---|
| 1 | 1 | A409001340 | ROTOR, MAGNETO | | | Slow-moving |
| 2 | 1 | A411001770 | COIL, IGNITION | | | Slow-moving |
| 3 | 1 | 90051500008 | NUT, FLANGE 8 | | | |
| 4 | 1 | E106000240 | GUIDE,AIR | | | Slow-moving |
| 5 | 1 | V485003020 | LEAD | | | Slow-moving |
| 6 | 2 | V203002400 | BOLT,5 | | | Slow-moving |
| 7 | 1 | 9311503010 | KEY, WOODRUFF | | | |
| 8 | 1 | A425000040 | SPARKPLUG | | | Fast-moving |
| 9 | 1 | A427000190 | CAP,SPARK PLUG | | | Slow-moving |
| 10 | 1 | A426000010 | TERMINAL,SPARKPLUG | | | Slow-moving |
| 11 | 1 | V485003010 | LEAD | | | Slow-moving |


Copyright YAMABIKO EUROPE SA

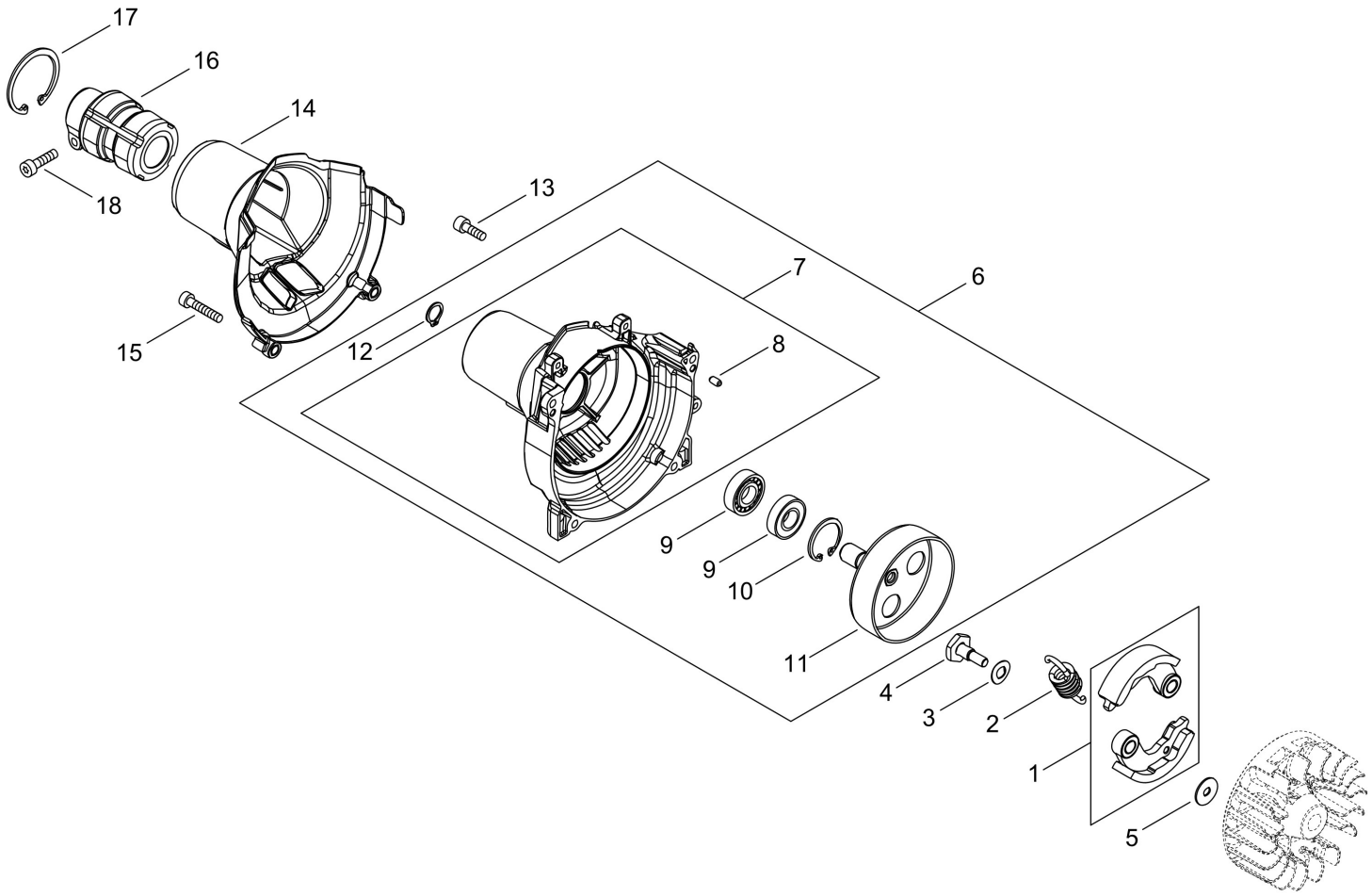



Copyright YAMABIKO EUROPE SA

# Illustration 004 CLUTCH

| Nummer | Antal | Kode | Beskrivelse | Vedhæftet fil | Recommended Stock Item | Remark |
|---|---|---|---|---|---|---|
| 1 | 1 | P021046970 | CLUTCH SHOE SET | | | |
| 2 | 1 | A566000320 | SPRING, CLUTCH | | | Medium-moving |
| 3 | 2 | 17504956030 | WASHER | | | Slow-moving |
| 4 | 2 | A557000150 | SHAFT, CLUTCH | | | Medium-moving |
| 5 | 2 | 17504805530 | WASHER (I) | | | Slow-moving |
| 6 | 1 | P100004780 | COVER ASY, FAN | | | |
| 7 | 1 | P100010620 | COVER,FAN | | | Slow-moving |
| 8 | 2 | 90033040080 | ROLLER 4* 8 | | | |
| 9 | 2 | 9401846001 | BEARING, BALL | | | |
| 10 | 1 | 9241928000 | RETAINING RING | | | |
| 11 | 1 | A556001810 | DRUM, CLUTCH | | | Medium-moving |
| 12 | 1 | 90070100012 | CIRCLIP 12 | | | |
| 13 | 2 | V805000150 | BOLT, TORX 5 | | | Slow-moving |
| 14 | 1 | A413000100 | BOOT | | | Slow-moving |
| 15 | 2 | V805000170 | BOLT, TORX 5 | | | Slow-moving |
| 16 | 1 | A575000640 | FIXTURE, MAIN PIPE | | | C |
| 17 | 1 | 9242442000 | RETAINING RING | | | |
| 18 | 1 | V805000170 | BOLT, TORX 5 | | | Slow-moving |


Copyright YAMABIKO EUROPE SA

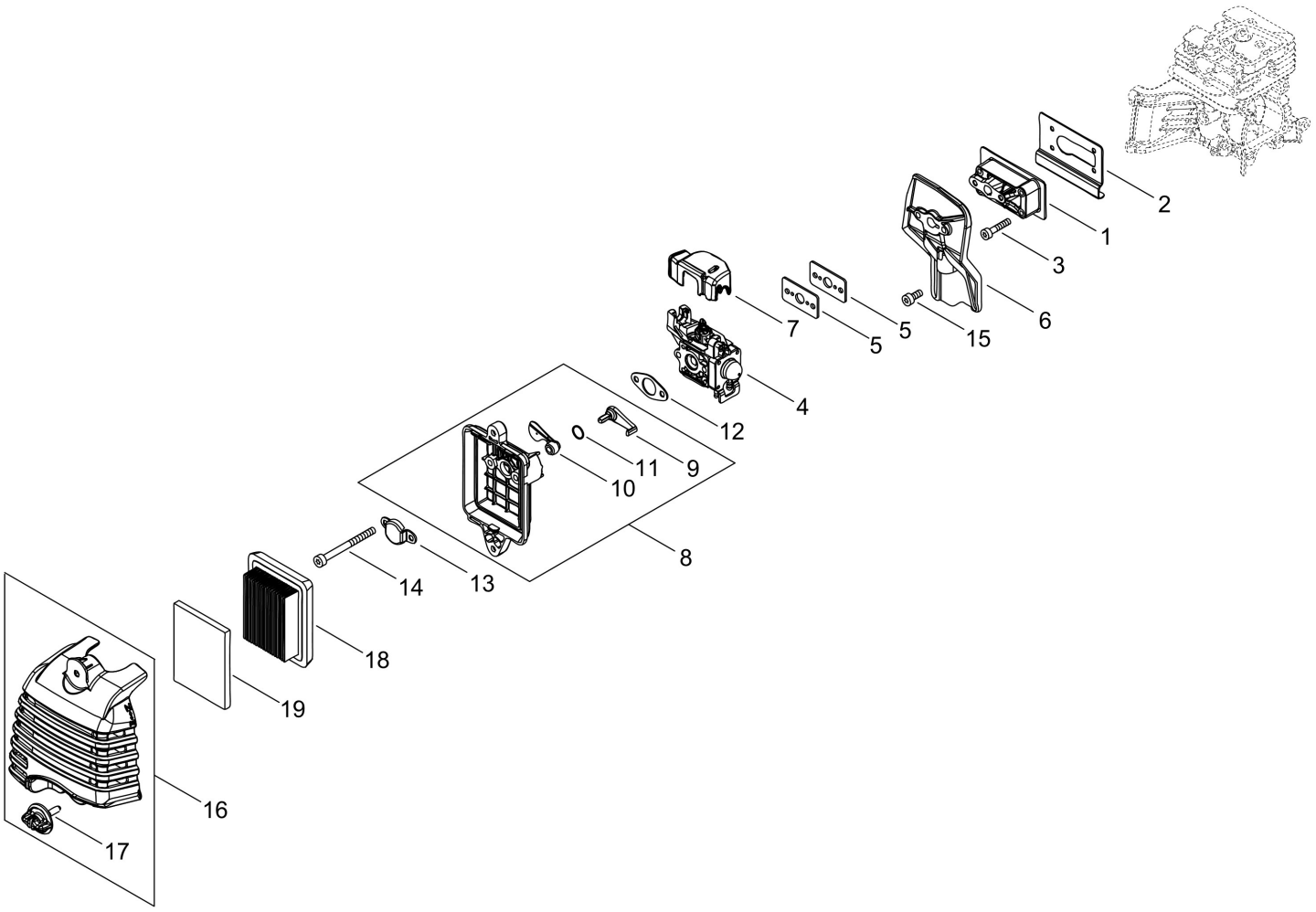



Copyright YAMABIKO EUROPE SA

# Illustration 005 AIR CLEANER, CARBURETOR

| Nummer | Antal | Kode | Beskrivelse | Vedhæftet fil | Recommended Stock Item | Remark |
|---|---|---|---|---|---|---|
| 1 | 1 | A200001190 | INSULATOR, INTAKE | | | Slow-moving |
| 2 | 1 | V103001980 | GASKET,INTAKE | | | Fast-moving |
| 3 | 4 | V804000120 | BOLT, TORX 4 | | | Slow-moving |
| 4 | 1 | A021004820 | CARBURETOR,DIAPHRAGM | | | Medium-moving |
| 5 | 2 | V103001990 | GASKET,INTAKE | | | Fast-moving |
| 6 | 1 | A209001070 | PLATE, INSULATOR | | | Slow-moving |
| 7 | 1 | A127000440 | COVER,DUST | | | Slow-moving |
| 8 | 1 | A023000360 | CASE,CLEANER | | | Slow-moving |
| 9 | 1 | A242000280 | LEVER, CHOKE | | | Slow-moving |
| 10 | 1 | A243000380 | SHUTTER, CHOKE | | | Slow-moving |
| 11 | 1 | V581000790 | RING,O | | | Fast-moving |
| 12 | 1 | V103001970 | GASKET,INTAKE | | | Fast-moving |
| 13 | 1 | A244000330 | PLATE, PREVENT | | | Slow-moving |
| 14 | 2 | V805000100 | BOLT, TORX 5 | | | Slow-moving |
| 15 | 1 | V805000140 | BOLT, TORX 5 | | | Slow-moving |
| 16 | 1 | P100004790 | CLEANER COVER ASY | | | |
| 17 | 2 | A235000450 | KNOB,CLEANER LID | | | Slow-moving |
| 18 | 1 | A226000361 | ELEMENT, AIR FILTER | | | Fast-moving |
| 19 | 1 | A226002200 | ELEMENT, AIR FILTER | | | Fast-moving |


Copyright YAMABIKO EUROPE SA

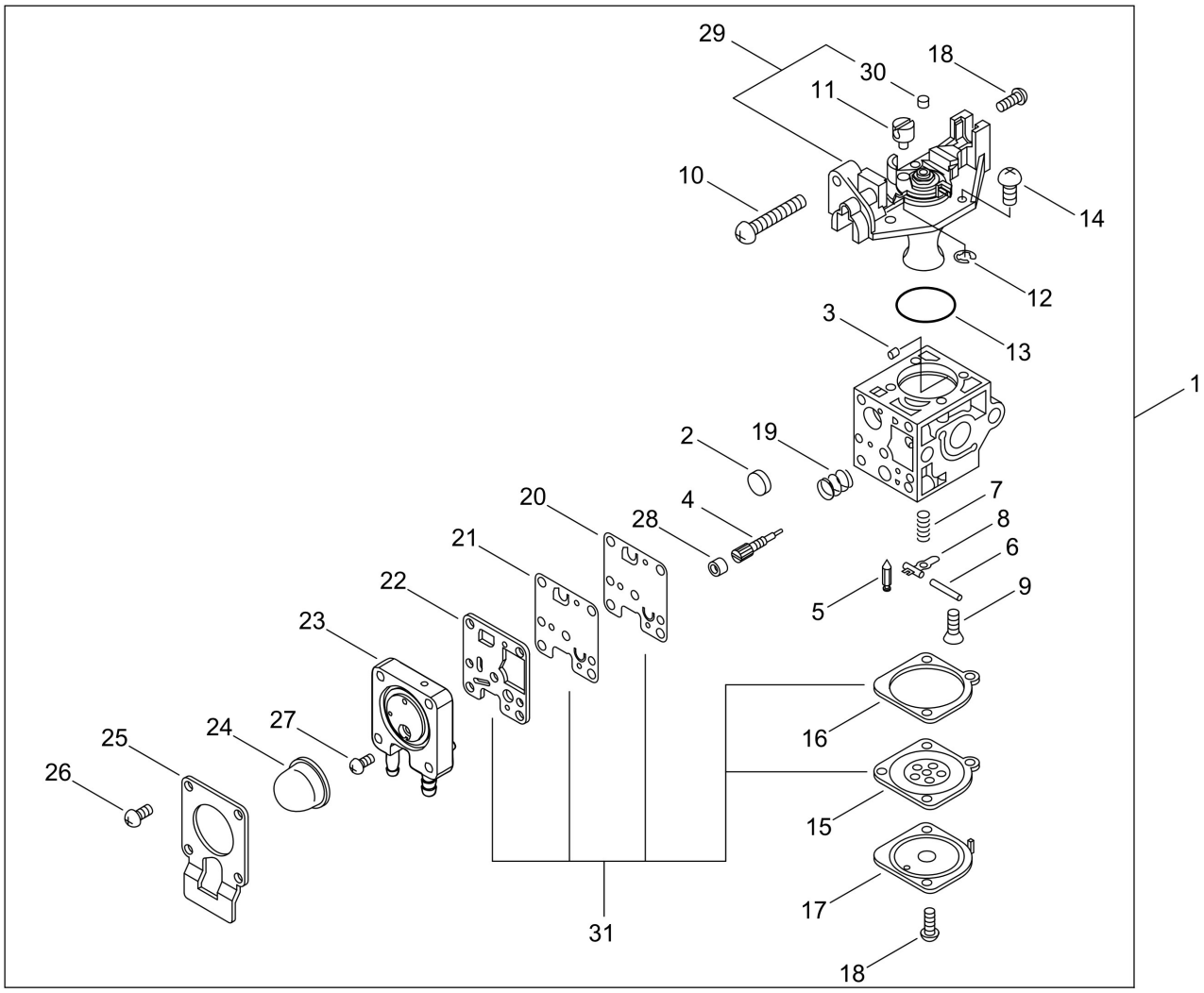



Copyright YAMABIKO EUROPE SA

# Illustration 006 CARBURETOR

| Nummer | Antal | Kode | Beskrivelse | Vedhæftet fil | Recommended Stock Item | Remark |
|---|---|---|---|---|---|---|
| 1 | 1 | A021004820 | CARBURETOR,DIAPHRAGM | | | Medium-moving |
| 2 | 1 | P005000010 | STRAINER | | | Slow-moving |
| 3 | 1 | P005001000 | ROLLER, GUIDE | | | Slow-moving |
| 4 | 1 | P005003950 | SCREW,MAIN MIXTURE | | | |
| 5 | 1 | 12533708260 | VALVE, INLET NEEDLE | | | Slow-moving |
| 6 | 1 | 12533813930 | PIN, METERING ARM | | | Slow-moving |
| 7 | 1 | 12532213930 | SPRING, COIL | | | Slow-moving |
| 8 | 1 | 12532308260 | ARM, VALVE | | | Slow-moving |
| 9 | 1 | 12533942030 | SCREW | | | Medium-moving |
| 10 | 1 | P005000100 | SCREW,THROTTLEADJUST | | | Slow-moving |
| 11 | 1 | P005001240 | POST | | | |
| 12 | 1 | P005000190 | E-RING | | | Slow-moving |
| 13 | 1 | P005000280 | O-RING | | | |
| 14 | 3 | 12534413931 | SCREW | | | Slow-moving |
| 15 | 1 | P005003760 | DIAPHRAGM ,METERING | | | |
| 16 | 1 | P005004700 | GASKET, METERING | | | Fast-moving |
| 17 | 1 | 12534252130 | COVER, DIAPHRAGM | | | Slow-moving |
| 18 | 3 | 12534452130 | SCREW | | | Slow-moving |
| 19 | 1 | P005003960 | SPRING, PUMP | | | |
| 20 | 1 | P005003930 | DIAPHRAGM, PUMP | | | |
| 21 | 1 | P005003940 | DIAPHRAGM, PUMP | | | |
| 22 | 1 | P005004710 | GASKET, FUEL PUMP | | | Fast-moving |
| 23 | 1 | P005004240 | BASE, ASY PRIMER | | | |
| 24 | 1 | P005003110 | PUMP, PRIMER | | | Fast-moving |
| 25 | 1 | P005000250 | RETAINER | | | Slow-moving |
| 26 | 4 | P005001900 | SCREW | | | Slow-moving |
| 27 | 1 | P005000270 | SCREW | | | Slow-moving |
| 28 | 1 | P005001270 | PLUG, AJUST SCREW | | | Medium-moving |
| 29 | 1 | P005005050 | COVER, ROTOR KIT | | | Slow-moving |
| 30 | 1 | P005001270 | PLUG, AJUST SCREW | | | Medium-moving |
| 31 | 1 | P005005700 | DIAPHRAGM/GASKET KIT | | | Fast-moving |


Copyright YAMABIKO EUROPE SA

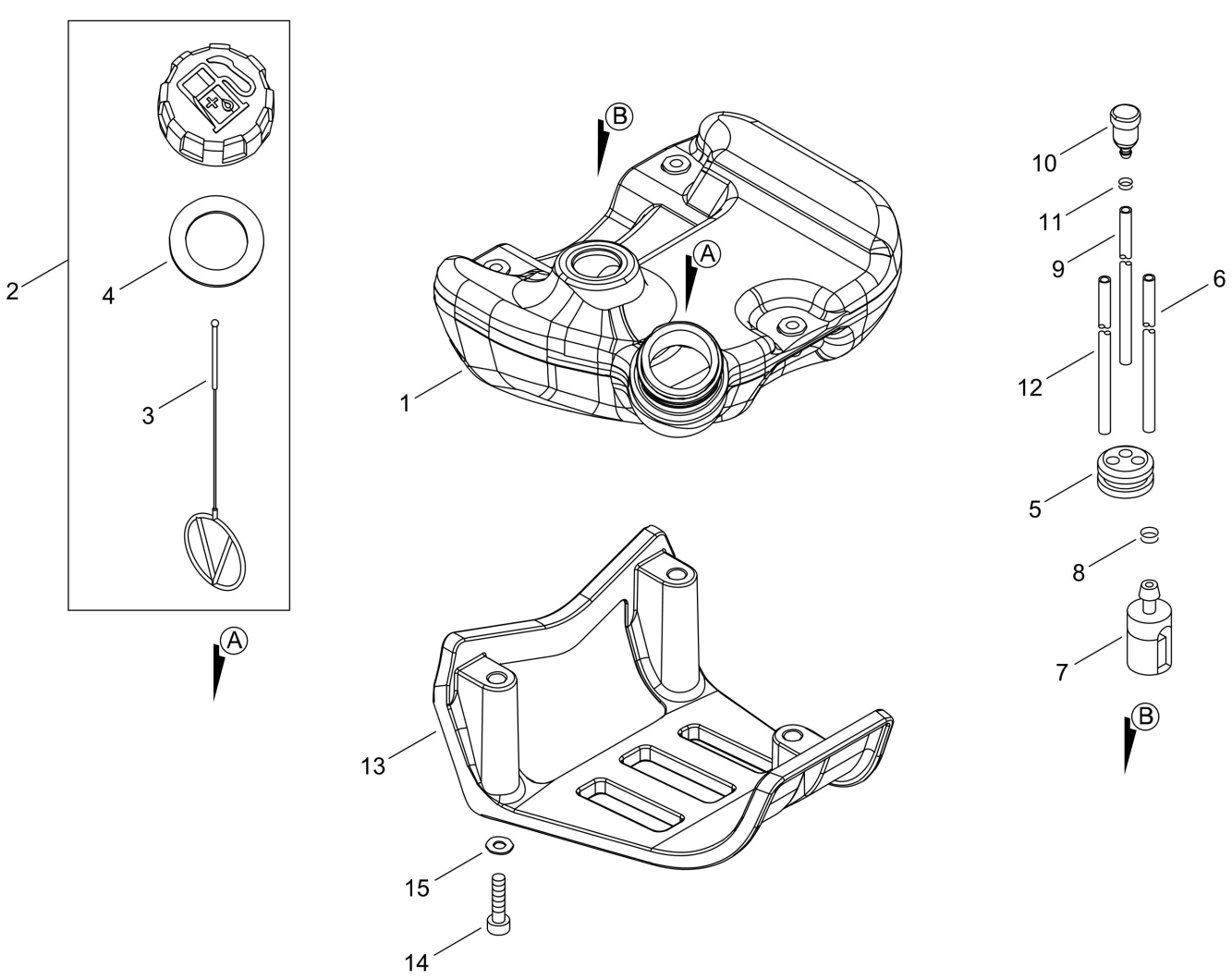



Copyright YAMABIKO EUROPE SA

# Illustration 007 FUEL TANK

| Nummer | Antal | Kode | Beskrivelse | Vedhæftet fil | Recommended Stock Item | Remark |
|---|---|---|---|---|---|---|
| 1 | 1 | A350002460 | TANK, FUEL | | | Slow-moving |
| 2 | 1 | P021012211 | CAP,FUEL ASY | | | Slow-moving |
| 3 | 1 | A365000060 | CONNECTOR,CAP | | | Medium-moving |
| 4 | 1 | V107000190 | GASKET,FUEL CAP | | | Fast-moving |
| 5 | 1 | 13211555931 | GROMMET, FUEL | | | Slow-moving |
| 6 | 1 | V471004171 | PIPE | | | Slow-moving |
| 7 | 1 | A369000420 | STRAINER, FUEL | | | Fast-moving |
| 8 | 1 | V490000500 | CLIP | | | Slow-moving |
| 9 | 1 | V471001501 | PIPE | | | Slow-moving |
| 10 | 1 | A356000050 | VALVE,CHECK | | | Medium-moving |
| 11 | 1 | V490000500 | CLIP | | | Slow-moving |
| 12 | 1 | V471005290 | PIPE | | | Slow-moving |
| 13 | 1 | A175000390 | STAND | | | Slow-moving |
| 14 | 3 | V805000170 | BOLT, TORX 5 | | | Slow-moving |
| 15 | 3 | 90060300005 | WASHER 5 | | | |


Copyright YAMABIKO EUROPE SA

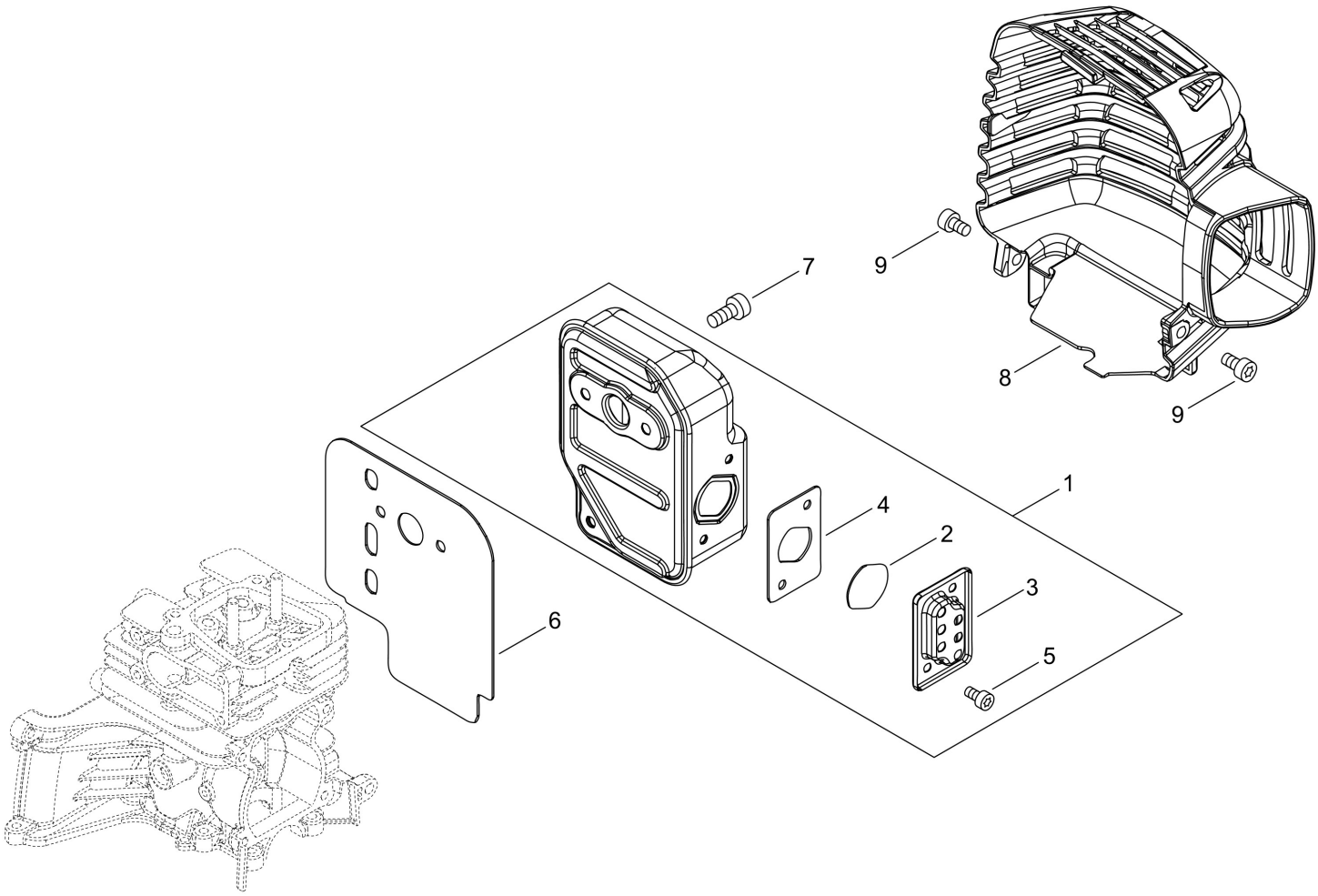



Copyright YAMABIKO EUROPE SA

# Illustration 008 MUFFLER

| Nummer | Antal | Kode | Beskrivelse | Vedhæftet fil | Recommended Stock Item | Remark |
|---|---|---|---|---|---|---|
| 1 | 1 | P100004810 | MUFFLER ASY | | | |
| 2 | 1 | A310000520 | SCREEN, ARRESTOR | | | Medium-moving |
| 3 | 1 | A313002070 | GUIDE, EXHAUST | | | Slow-moving |
| 4 | 1 | V104002360 | GASKET,EXHAUST | | | Fast-moving |
| 5 | 2 | V804000030 | BOLT, TORX 4 | | | Slow-moving |
| 6 | 1 | V104002370 | GASKET,EXHAUST | | | Fast-moving |
| 7 | 3 | V805000250 | BOLT, TORX 5 | Y2021-718 | | Slow-moving |
| 8 | 1 | A320001280 | COVER,MUFFLER | | | Slow-moving |
| 9 | 2 | V805000140 | BOLT, TORX 5 | | | Slow-moving |


Copyright YAMABIKO EUROPE SA

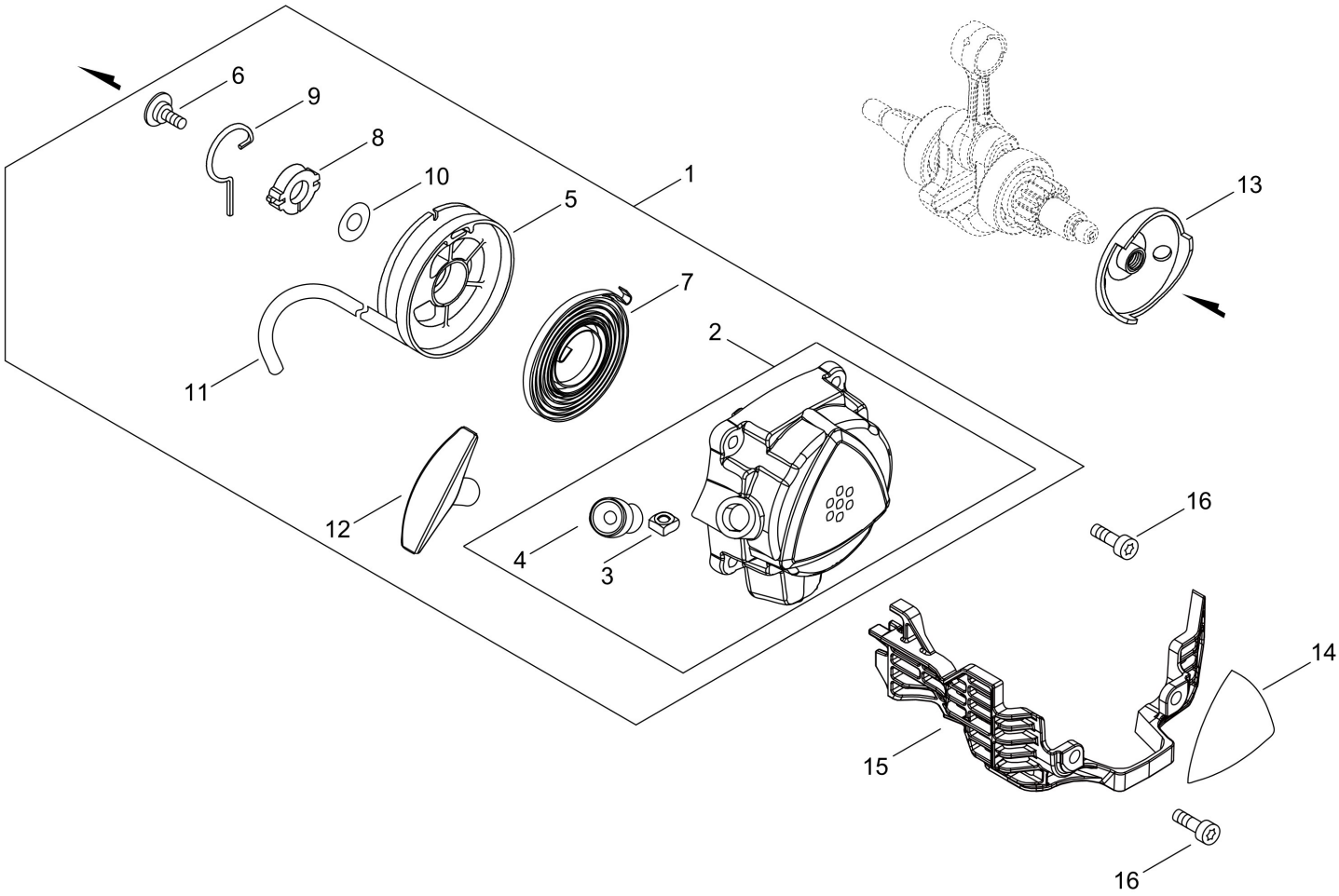



Copyright YAMABIKO EUROPE SA

# Illustration 009 RECOIL STARTER, PULLY

| Nummer | Antal | Kode | Beskrivelse | Vedhæftet fil | Recommended Stock Item | Remark |
|---|---|---|---|---|---|---|
| 1 | 1 | A051003330 | STARTER,RECOIL ASY | | | Medium-moving |
| 2 | 1 | P022059510 | CASE, STARTER | | | Slow-moving |
| 3 | 1 | P022022010 | NUT | | | |
| 4 | 1 | P022045770 | GUIDE, ROPE | | | Slow-moving |
| 5 | 1 | P022049770 | DRUM, STARTER | | | |
| 6 | 1 | 17723661830 | SCREW | | | |
| 7 | 1 | 17722042030 | SPRING, REWIND | | | Medium-moving |
| 8 | 1 | P022049780 | COLLAR | | | |
| 9 | 1 | P022049790 | SWING ARM | | | |
| 10 | 1 | 17721441030 | WASHER | | | |
| 11 | 1 | P022049800 | ROPE, STARTER | | | |
| 12 | 1 | 17722844330 | GRIP, STARTER | | | Slow-moving |
| 13 | 1 | A052000300 | STARTER PULLEY | | | Slow-moving |
| 14 | 1 | X547003720 | LABEL,ECHO | | | Slow-moving |
| 15 | 1 | A127000600 | COVER,DUST | | | Slow-moving |
| 16 | 4 | V805000150 | BOLT, TORX 5 | | | Slow-moving |


Copyright YAMABIKO EUROPE SA

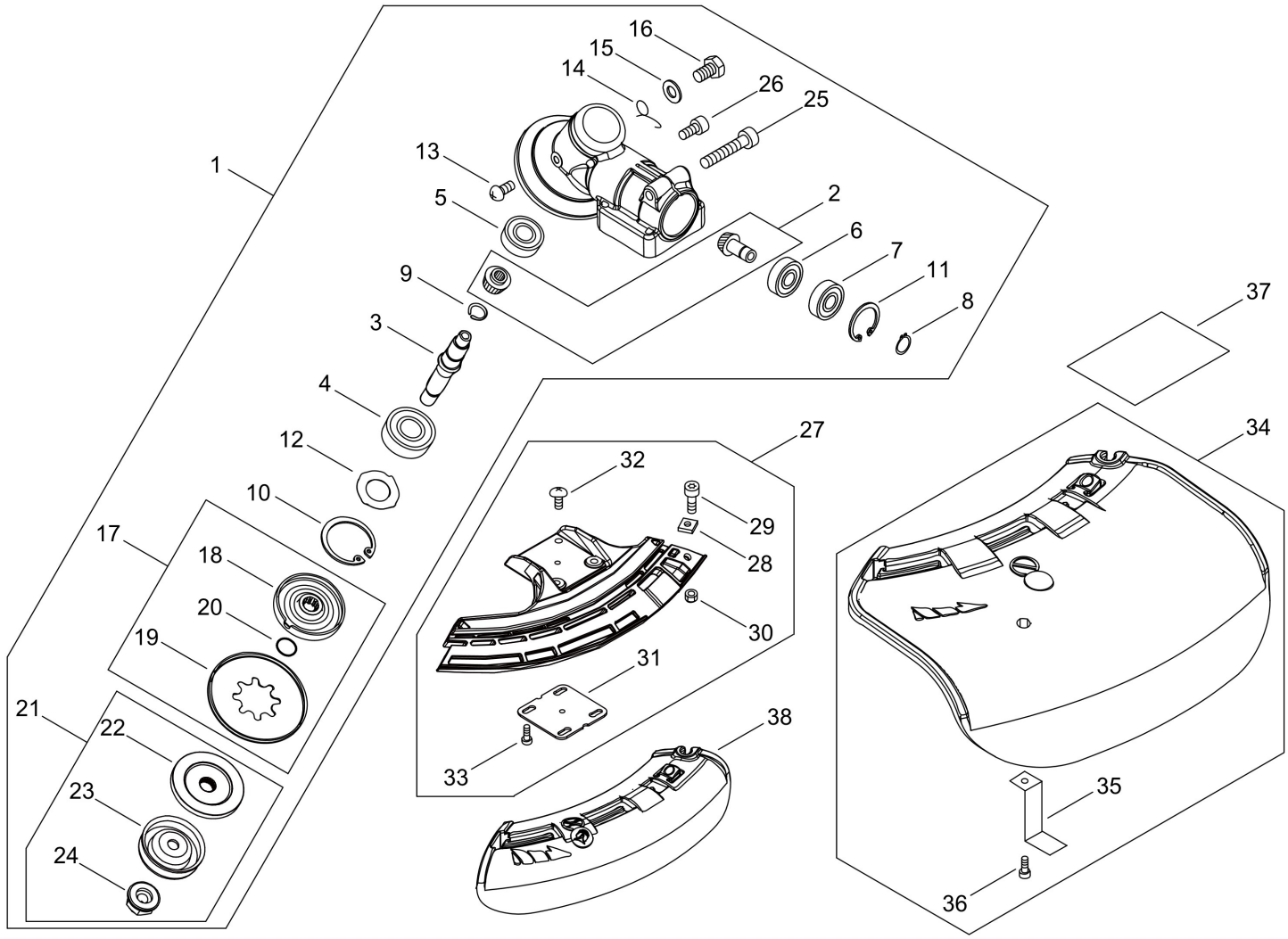



Copyright YAMABIKO EUROPE SA

# Illustration 010 GEAR CASE, SHIELD

| Nummer | Antal | Kode | Beskrivelse | Vedhæftet fil | Recommended Stock Item | Remark |
|---|---|---|---|---|---|---|
| 1 | 1 | P100004840 | CASE,GEAR ASY | | | |
| 2 | 1 | V000000260 | GEAR SET, BEVEL | | | Slow-moving |
| 3 | 1 | C534001080 | SHAFT, GEAR | | | Slow-moving |
| 4 | 1 | 90081206201 | BEARING, BALL | | | |
| 5 | 1 | 90081000629 | BEARING, BALL | | | |
| 6 | 1 | 90080000609 | BEARING, BALL 609 | | | |
| 7 | 1 | 90080300609 | BEARING, BALL | | | |
| 8 | 1 | 90070100009 | RETAINING RING | | | |
| 9 | 1 | 90070600012 | CIRCLIP 12 | | | |
| 10 | 1 | 90070200032 | CIRCLIP 32 | | | |
| 11 | 1 | 90070200025 | RETAINING RING | | | |
| 12 | 1 | V340000180 | WASHER | | | Slow-moving |
| 13 | 1 | 90022004006 | SCREW 4* 6 | | | |
| 14 | 1 | V452001310 | SPRING,TORSION | | | Medium-moving |
| 15 | 1 | 90060350008 | WASHER | | | Slow-moving |
| 16 | 1 | 61043450031 | BOLT 8* 8 | | | Medium-moving |
| 17 | 1 | P100009780 | FIXTURE, BLADE SET | | | Medium-moving |
| 18 | 1 | C535000011 | FIXTURE,BLADE | | | Medium-moving |
| 19 | 1 | 61035256830 | PLATE, CUP | | | |
| 20 | 1 | 90072000012 | O-RING 12 | | | |
| 21 | 1 | P200000990 | BLADE FIXTURE KIT | | | |
| 22 | 1 | 61031452130 | PLATE, ADAPTER (L) | | | Medium-moving |
| 23 | 1 | 69922956830 | PLATE, COVER | | | Medium-moving |
| 24 | 1 | 61032052130 | NUT 10 | | | Medium-moving |
| 25 | 1 | V806000020 | BOLT, TORX 6 | | | Slow-moving |
| 26 | 1 | V805000130 | BOLT, TORX 5 | | | Slow-moving |
| 27 | 1 | P100010520 | SHIELD ASY | | | Medium-moving |
| 28 | 1 | 90056500005 | NUT 5 | | | |
| 29 | 1 | V805000170 | BOLT, TORX 5 | | | Slow-moving |
| 30 | 1 | 90056200005 | LOCKNUT 5 | | | |
| 31 | 1 | C552000200 | PLATE, SHIELD | | | Slow-moving |
| 32 | 1 | 9131604010 | SCREW | | | Slow-moving |
| 33 | 4 | V805000260 | BOLT, TORX 5 | | | Slow-moving |
| 34 | 1 | P021043982 | SHIELD ASY, BLADE | | | Medium-moving |
| 35 | 1 | C554000002 | KNIFE,CORD | | | Medium-moving |
| 36 | 1 | V805000150 | BOLT, TORX 5 | | | Slow-moving |
| 37 | 1 | X530000560 | LABEL,EYE CATCHER | | | Slow-moving |
| 38 | 1 | C550000541 | SHIELD, BLADE | | | Medium-moving |


Copyright YAMABIKO EUROPE SA

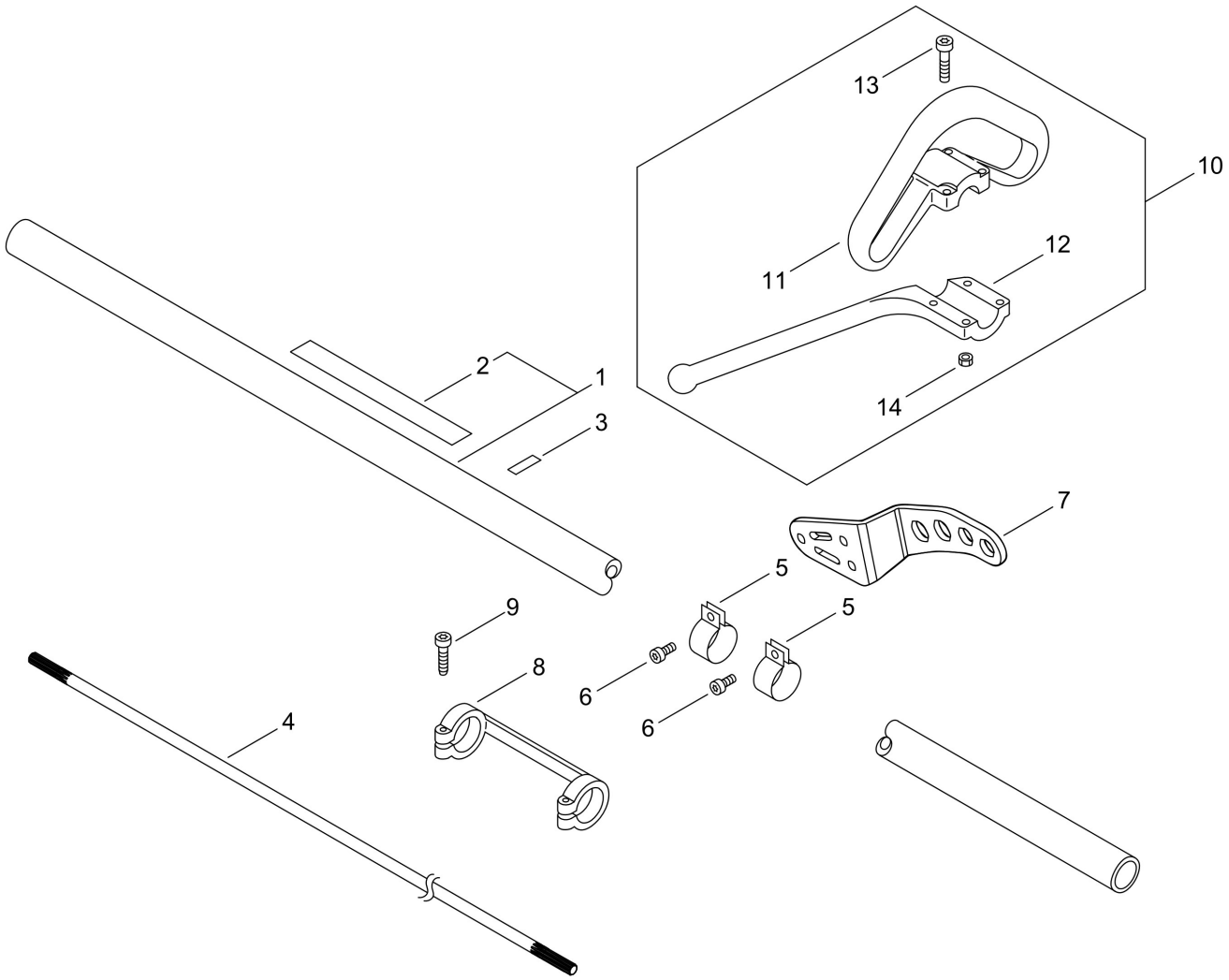



Copyright YAMABIKO EUROPE SA

## Illustration 011 MAIN PIPE, HANDLE

| Nummer | Antal | Kode | Beskrivelse | Vedhæftet fil | Recommended Stock Item | Remark |
|---|---|---|---|---|---|---|
| 1 | 1 | P021049000 | MAIN PIPE ASY | | | |
| 2 | 1 | 89061743130 | LABEL,CAUTION | | | Slow-moving |
| 3 | 1 | 89015204930 | LABEL, CAUTION | | | Slow-moving |
| 4 | 1 | 61001125530 | SHAFT, DRIVE | | | Slow-moving |
| 5 | 2 | V495001010 | BAND | | | Slow-moving |
| 6 | 2 | V805000140 | BOLT, TORX 5 | | | Slow-moving |
| 7 | 1 | C624000030 | HANGER,HARNESS | | | Slow-moving |
| 8 | 1 | 61028054131 | COLLAR | | | Slow-moving |
| 9 | 2 | V804000020 | BOLT, TORX 4 | | | Slow-moving |
| 10 | 1 | P021050970 | FRONT HANDLE ASY | | | |
| 11 | 1 | C400000220 | HANDLE,FRONT | | | Slow-moving |
| 12 | 1 | 35164351730 | BRACET,HANDLE | | | Slow-moving |
| 13 | 4 | V805000050 | BOLT, TORX 5 | | | Slow-moving |
| 14 | 4 | 90050000005 | NUT | | | |


Copyright YAMABIKO EUROPE SA

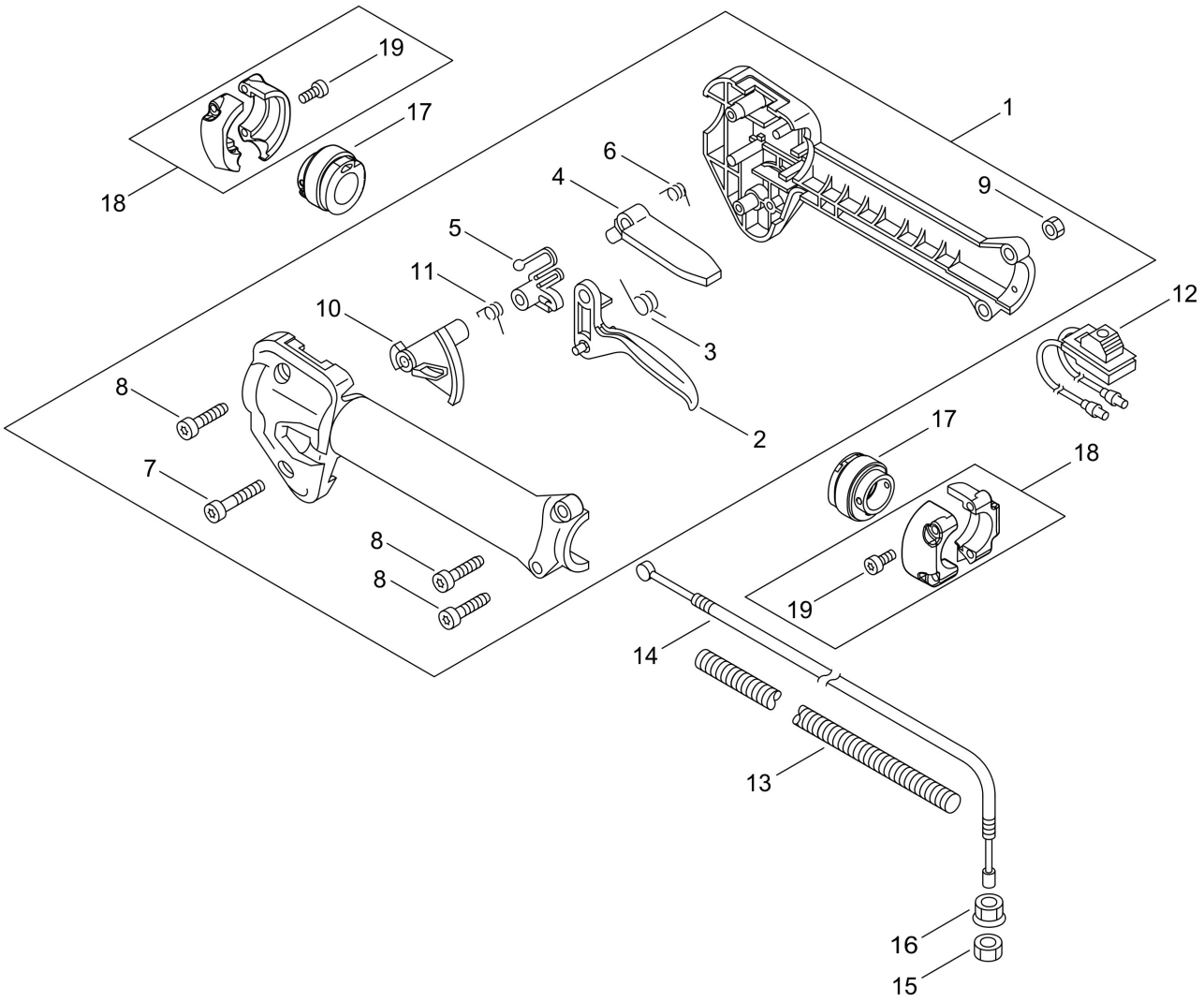



Copyright YAMABIKO EUROPE SA

# Illustration 012 THROTTLE

| Nummer | Antal | Kode | Beskrivelse | Vedhæftet fil | Recommended Stock Item | Remark |
|---|---|---|---|---|---|---|
| 1 | 1 | P100004850 | THROTTLE ASY | | | |
| 2 | 1 | C450000110 | TRIGGER,THROTTLE | | | Slow-moving |
| 3 | 1 | 17804342230 | SPRING, THR. RETURN | | | Medium-moving |
| 4 | 1 | 17809052632 | LOCKOUT, T. CONTROL | | | Slow-moving |
| 5 | 1 | C461000000 | LATCH,THROTTLE | | | Slow-moving |
| 6 | 1 | 17801352630 | SPRING, THR. LOCK | | | Medium-moving |
| 7 | 1 | V805000060 | BOLT, TORX 5 | | | Slow-moving |
| 8 | 3 | V805000170 | BOLT, TORX 5 | | | Slow-moving |
| 9 | 4 | 90050000005 | NUT | | | |
| 10 | 1 | C461000010 | LATCH,THROTTLE | | | Slow-moving |
| 11 | 1 | V452000120 | SPRING,TORSION | | | Medium-moving |
| 12 | 1 | A440002980 | SWITCH, ON OFF | | | Slow-moving |
| 13 | 1 | V475008930 | TUBE | | | Slow-moving |
| 14 | 1 | V430005150 | CABLE,BOWDEN | | | Medium-moving |
| 15 | 1 | 90050200006 | NUT 6 #3 | | | |
| 16 | 1 | 90051800006 | NUT, FLANGE | | | |
| 17 | 2 | V420000960 | CUSHION | | | Medium-moving |
| 18 | 2 | P021050990 | HANDLE FIXTURE ASY | | | |
| 19 | 4 | V805000170 | BOLT, TORX 5 | | | Slow-moving |


Copyright YAMABIKO EUROPE SA

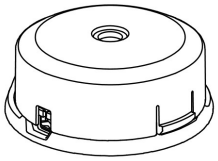

Z5

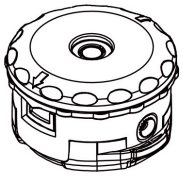

SF500/E

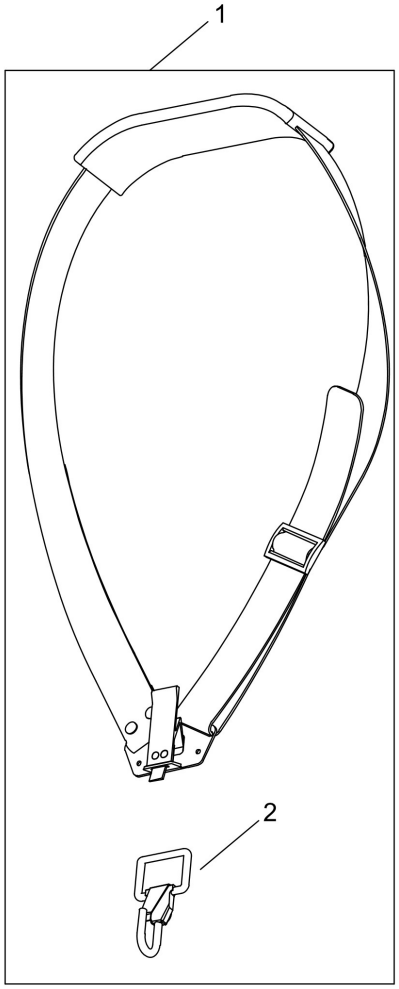


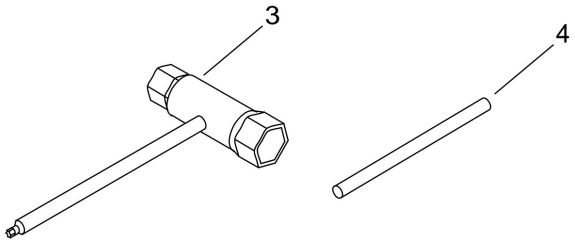


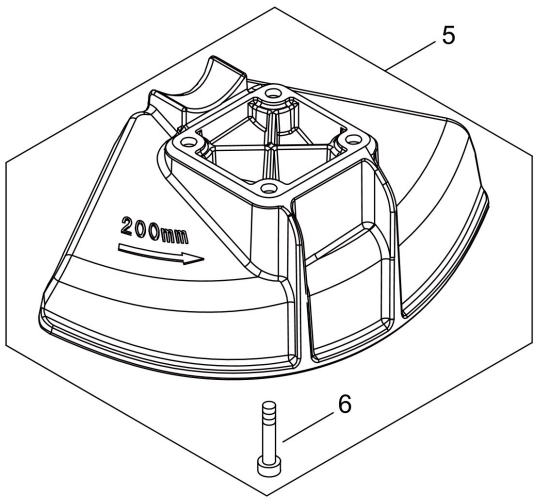



Copyright YAMABIKO EUROPE SA

# Illustration 013 ACCESSORIES

| Nummer | Antal | Kode | Beskrivelse | Vedhæftet fil | Recommended Stock Item | Remark |
|---|---|---|---|---|---|---|
| 1 | 1 | C062000390 | STRAP ASSY | | | Medium-moving |
| 2 | 1 | C649000200 | HOOK | | | Slow-moving |
| 3 | 1 | X601000020 | TOOL,BOX SPANNER | | | Slow-moving |
| 4 | 1 | X606000080 | TOOL,BAR | | | Slow-moving |
| 5 | 1 | P100008860 | SAW BLADE SHIELD | | | |
| 6 | 4 | V805000410 | BOLT, TORX 5 | | | Slow-moving |


Copyright YAMABIKO EUROPE SA