SRM-267L (U64740000001-)



Dokumenter

001 CYLINDER, PISTON, CRANKSHAFT

002 CRANKCASE

003 MAGNETO

004 CLUTCH

005 AIR CLEANER, CARBURETOR

006 CARBURETOR

007 FUEL TANK

008 MUFFLER

009 RECOIL STARTER, PULLY

010 GEAR CASE, SHIELD

011 MAIN PIPE, HANDLE

012 THROTTLE

013 ACCESSORIES

Copyright YAMABIKO EUROPE SA

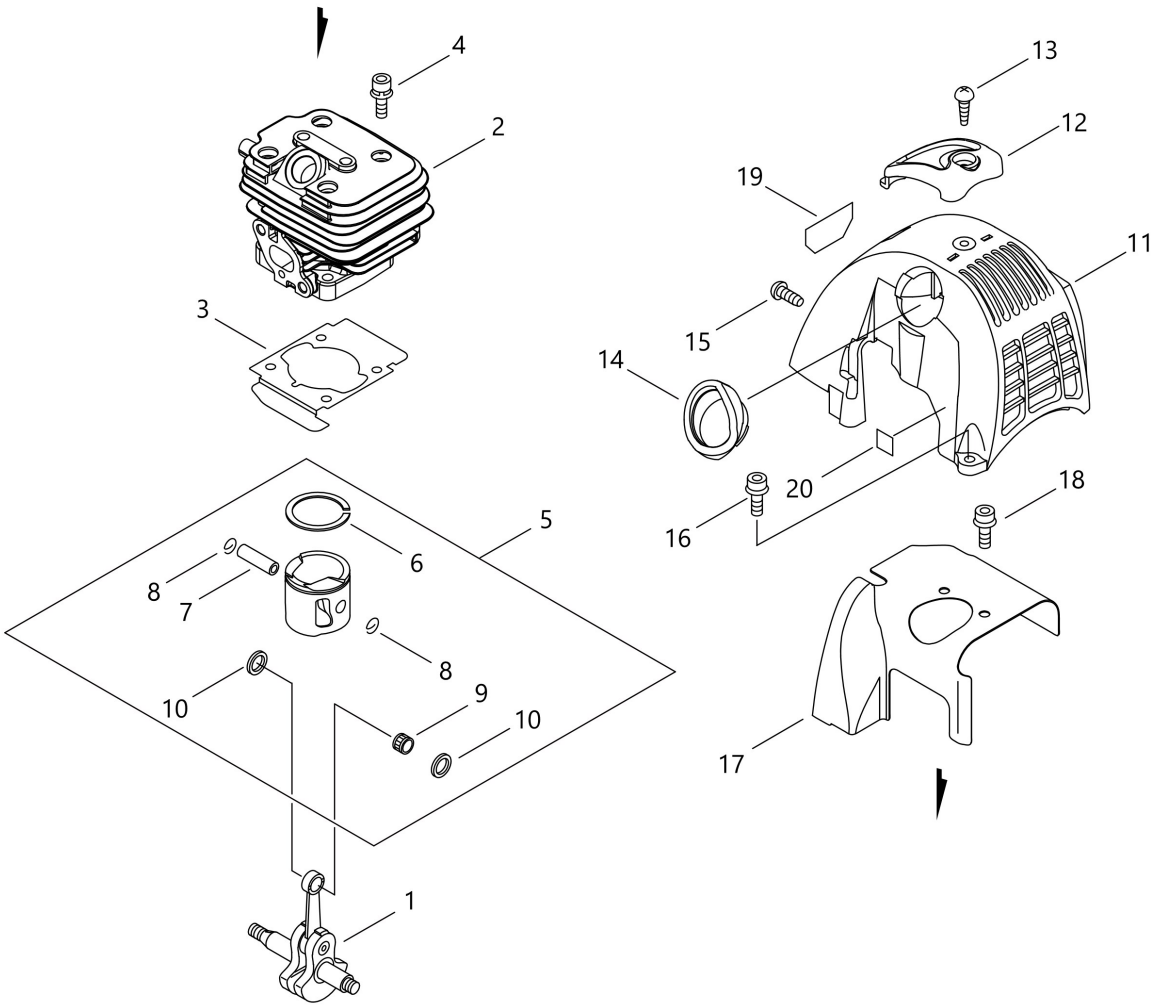

Copyright YAMABIKO EUROPE SA

Illustration 001 CYLINDER, PISTON, CRANKSHAFT

Nummer	Antal	Kode	Beskrivelse	Vedhæftet fil	Recommended Stock Item	Remark
1	1	A011000434	CRANKSHAFT,ASY			Slow-moving
2	1	A130000761	CYLINDER			Slow-moving
3	1	V100000210	GASKET,CYL			Medium-moving
4	4	90016205025	BOLT, H.S. 5*25			
5	1	P021009771	PISTON KIT			
6	1	A101000170	RING, PISTON			Medium-moving
7	1	10001335430	PIN, PISTON			Slow-moving
8	2	10001503931	CIRCLIP, PISTON PIN			Slow-moving
9	1	10001216131	BEARING, NEEDLE			Slow-moving
10	2	10001453630	SPACER, PISTON PIN			Slow-moving
11	1	A160000780	COVER,CYLINDER			Slow-moving
12	1	A162000100	GUARD,TOP			Slow-moving
13	1	90025605016	SCREW, TAPPING			
14	1	A162000080	GUARD,TOP			Slow-moving
15	1	9114105012	BOLT HS, BUTTON			
16	1	9112105016	BOLT, FLANGE			
17	1	A160000691	COVER,CYLINDER			Slow-moving
18	2	90010605008	BOLT HSH, FLANGE			
19	1	X547003760	LABEL,ECHO			Slow-moving
20	1	X524001901	LABEL			Slow-moving

Copyright YAMABIKO EUROPE SA

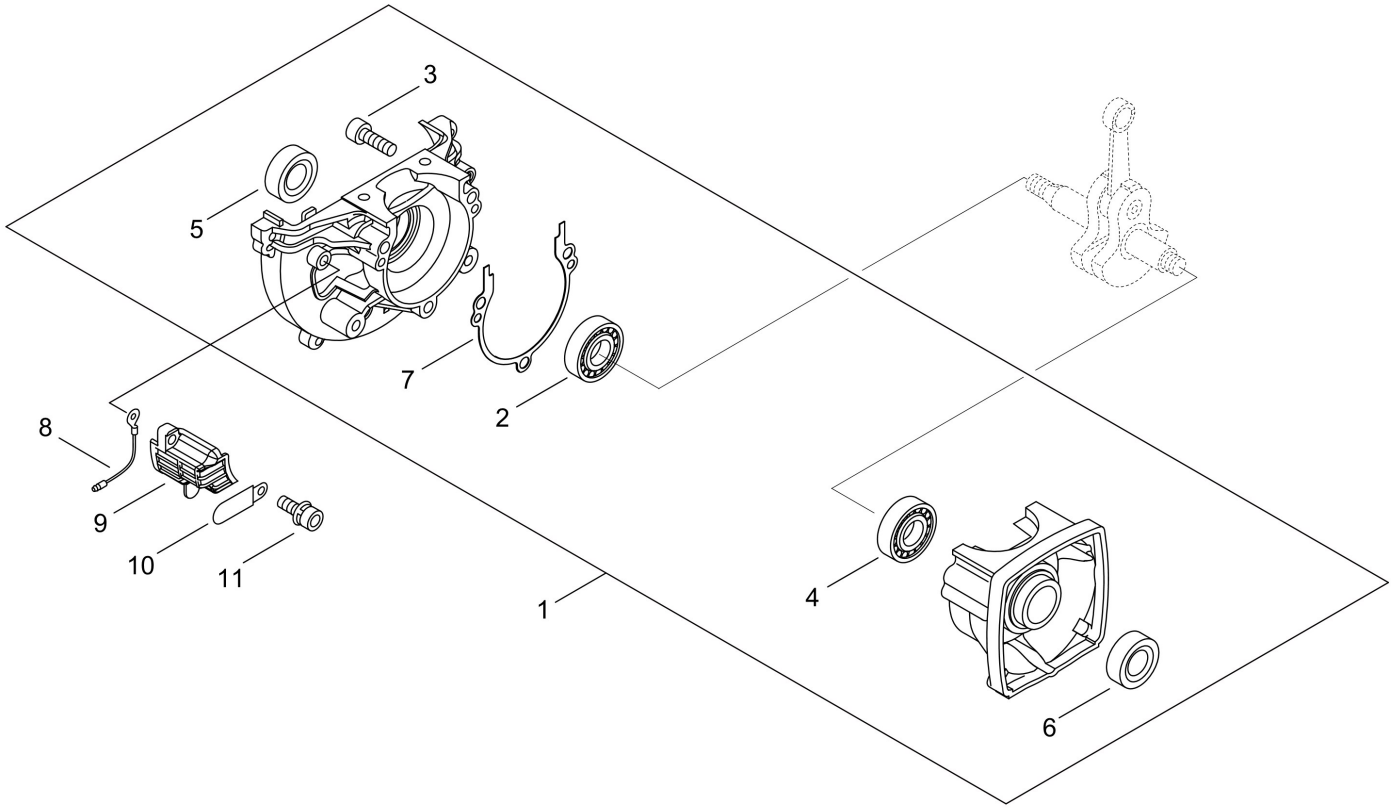

Copyright YAMABIKO EUROPE SA

Illustration 002 CRANKCASE

Nummer	Antal	Kode	Beskrivelse	Vedhæftet fil	Recommended Stock Item	Remark
1	1	P021010801	CRANKCASE KIT			
2	1	9403536201	BEARING BALL			
3	3	90016205028	BOLT, H.S. 5*28			
4	1	9403536201	BEARING BALL			
5	1	10021242031	OILSEAL			Slow-moving
6	1	V505000050	SEAL,OIL 12			Slow-moving
7	1	10024242030	GASKET, CRANKCASE			Medium-moving
8	1	15663543130	LEAD, GROUND			Slow-moving
9	1	A127000160	COVER,DUST			Slow-moving
10	1	15911621231	CLIP			Slow-moving
11	1	9111805016	BOLT HSH			

Copyright YAMABIKO EUROPE SA

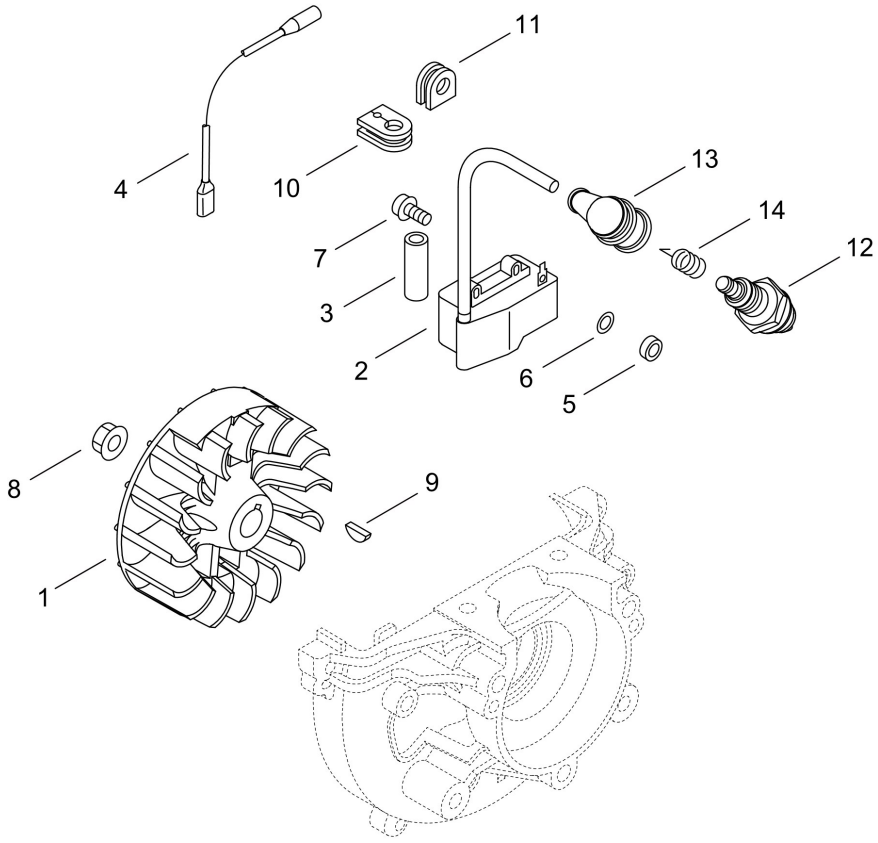

Copyright YAMABIKO EUROPE SA

Illustration 003 MAGNETO

Nummer	Antal	Kode	Beskrivelse	Vedhæftet fil	Recommended Stock Item	Remark
1	1	A409001222	ROTOR, MAGNETO			Slow-moving
2	1	A411000252	COIL, IGNITION			Slow-moving
3	1	V475003380	TUBE			Slow-moving
4	1	16201004561	LEAD, GROUND			Slow-moving
5	2	V322000031	WASHER,CIRCULAR 4			Slow-moving
6	2	90060300004	WASHER			
7	2	V202000130	BOLT,4			Slow-moving
8	1	90051500008	NUT, FLANGE 8			
9	1	10014212330	KEY, WOODRUFF			Slow-moving
10	1	V135000030	GROMMET,HT CORD			Slow-moving
11	1	15611004920	GROMMET			Slow-moving
12	1	A425000000	SPARKPLUG			Fast-moving
13	1	A427000013	CAP,SPARK PLUG			Slow-moving
14	1	A426000010	TERMINAL,SPARKPLUG			Slow-moving

Copyright YAMABIKO EUROPE SA

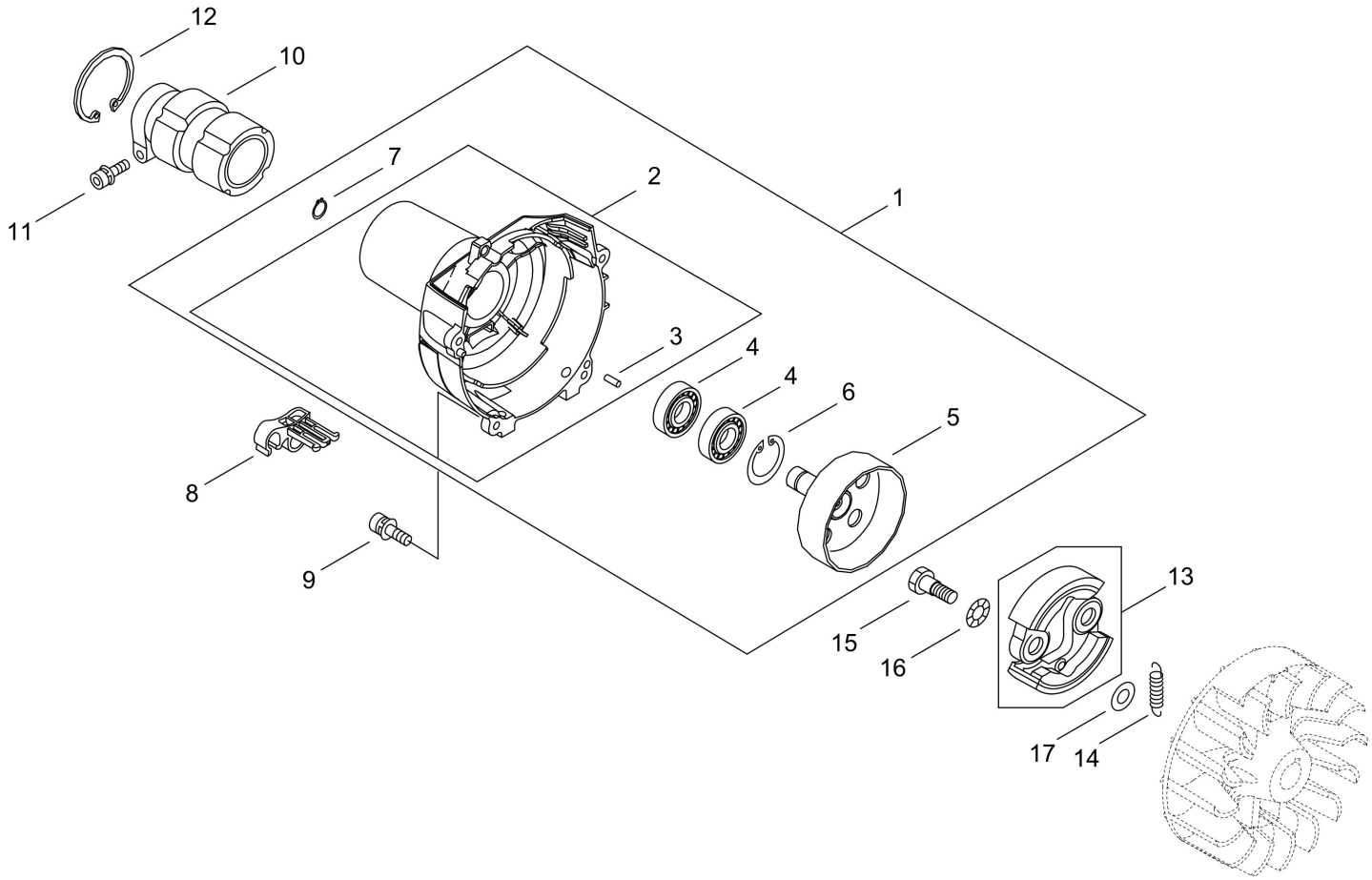

Copyright YAMABIKO EUROPE SA

Illustration 004 CLUTCH

Nummer	Antal	Kode	Beskrivelse	Vedhæftet fil	Recommended Stock Item	Remark
1	1	P021013530	COVER,FAN ASSY			
2	1	A172000750	COVER,FAN			Slow-moving
3	2	90033040080	ROLLER 4* 8			
4	2	90080706001	BEARING, BALL 6001			
5	1	A556000040	DRUM,CLUTCH			Medium-moving
6	1	90070200028	CIRCLIP 28			
7	1	90070100012	CIRCLIP 12			
8	1	V491000180	CLIP			Slow-moving
9	4	V202000090	BOLT,4			Slow-moving
10	1	A575000640	FIXTURE, MAIN PIPE			C
11	1	9111805028	BOLT HSH			Slow-moving
12	1	90070200042	RETAINING RING			
13	1	P021046901	CLUTCH SHOE SET			
14	1	V451001390	SPRING,TENSION			Medium-moving
15	2	17504656030	SHAFT, CLUTCH			Medium-moving
16	2	17504956030	WASHER			Slow-moving
17	2	17504805530	WASHER (I)			Slow-moving

Copyright YAMABIKO EUROPE SA

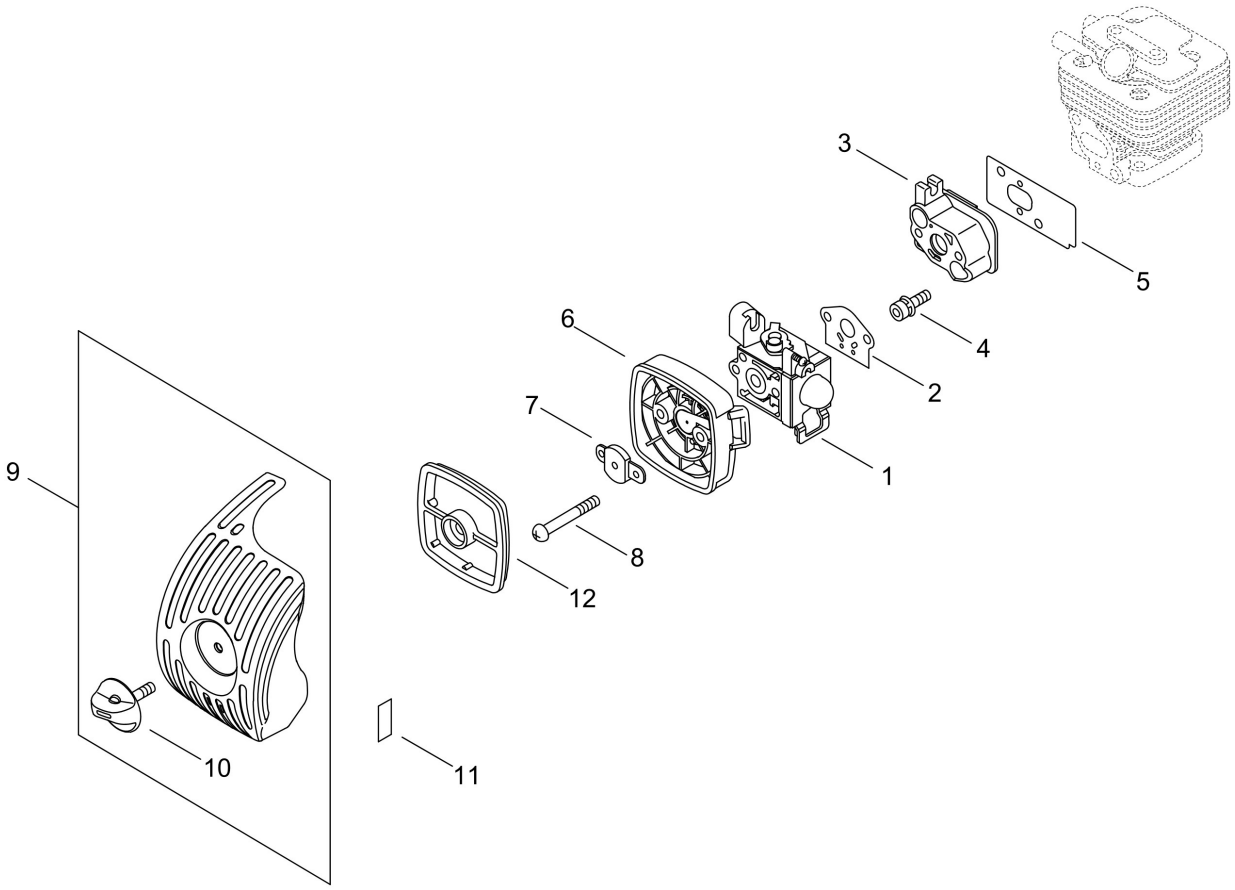

Copyright YAMABIKO EUROPE SA

Illustration 005 AIR CLEANER, CARBURETOR

Nummer	Antal	Kode	Beskrivelse	Vedhæftet fil	Recommended Stock Item	Remark
1	1	A021001742	CARBURETOR,DIAPHRAGM			Medium-moving
2	1	V103000270	GASKET,INTAKE			Fast-moving
3	1	A200000200	INSULATOR,INTAKE			Slow-moving
4	2	90016205025	BOLT, H.S. 5*25			
5	1	V103000210	GASKET,INTAKE			Fast-moving
6	1	P021049010	CASE,CLEANER			Slow-moving
7	1	12901152730	PLATE, PREVENT			Slow-moving
8	2	90024205065	SCREW			
9	1	P021047720	CLEANER COVER ASY			
10	1	V299000250	KNOB,FASTENER			Slow-moving
11	1	89033252730	LABEL, CHOKE			Slow-moving
12	1	A226001410	ELEMENT,AIR FILTER			Fast-moving

Copyright YAMABIKO EUROPE SA

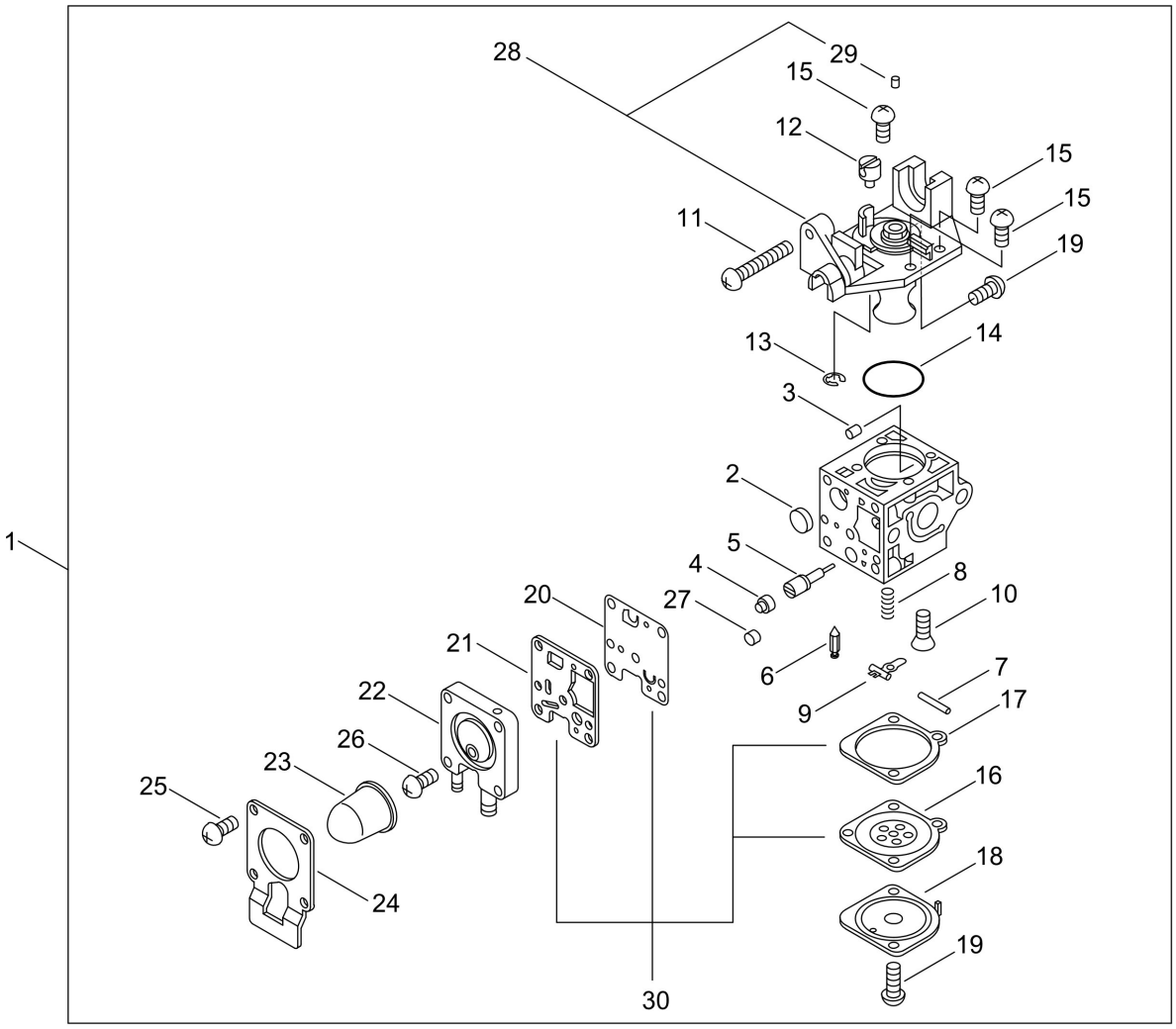

Copyright YAMABIKO EUROPE SA

Illustration 006 CARBURETOR

Nummer	Antal	Kode	Beskrivelse	Vedhæftet fil	Recommended Stock Item	Remark
1	1	A021001742	CARBURETOR,DIAPHRAGM			Medium-moving
2	1	P005000010	STRAINER			Slow-moving
3	1	P005001000	ROLLER, GUIDE			Slow-moving
4	1	P005001250	RETAINER,PLUG BALL			
5	1	P005001290	SCREW,MAINN MIXTURE			
6	1	12533708260	VALVE, INLET NEEDLE			Slow-moving
7	1	12533813930	PIN, METERING ARM			Slow-moving
8	1	12532207260	SPRING, COIL			Slow-moving
9	1	12532308260	ARM, VALVE			Slow-moving
10	1	12533942030	SCREW			Medium-moving
11	1	P005000100	SCREW,THROTTLEADJUST			Slow-moving
12	1	P005001240	POST			
13	1	P005000190	E-RING			Slow-moving
14	1	P005004260	RING,O			
15	3	12534413931	SCREW			Slow-moving
16	1	P005002230	DIAPHRAGM ,METERING			Fast-moving
17	1	P005004700	GASKET, METERING			Fast-moving
18	1	12534252130	COVER, DIAPHRAGM			Slow-moving
19	3	12534452130	SCREW			Slow-moving
20	1	P005000510	DIAPHRAGM, PUMP			Fast-moving
21	1	P005004710	GASKET, FUEL PUMP			Fast-moving
22	1	P005001890	BASE, ASY PRIMER			
23	1	P005003110	PUMP, PRIMER			Fast-moving
24	1	P005000250	RETAINER			Slow-moving
25	4	P005001900	SCREW			Slow-moving
26	1	P005000270	SCREW			Slow-moving
27	1	P005001270	PLUG, AJUST SCREW			Medium-moving
28	1	P005002070	COVER ASY, ROTOR			
29	1	P005001270	PLUG, AJUST SCREW			Medium-moving
30	1	P005005140	DIAPHRAGM/GASKET KIT			Fast-moving

Copyright YAMABIKO EUROPE SA

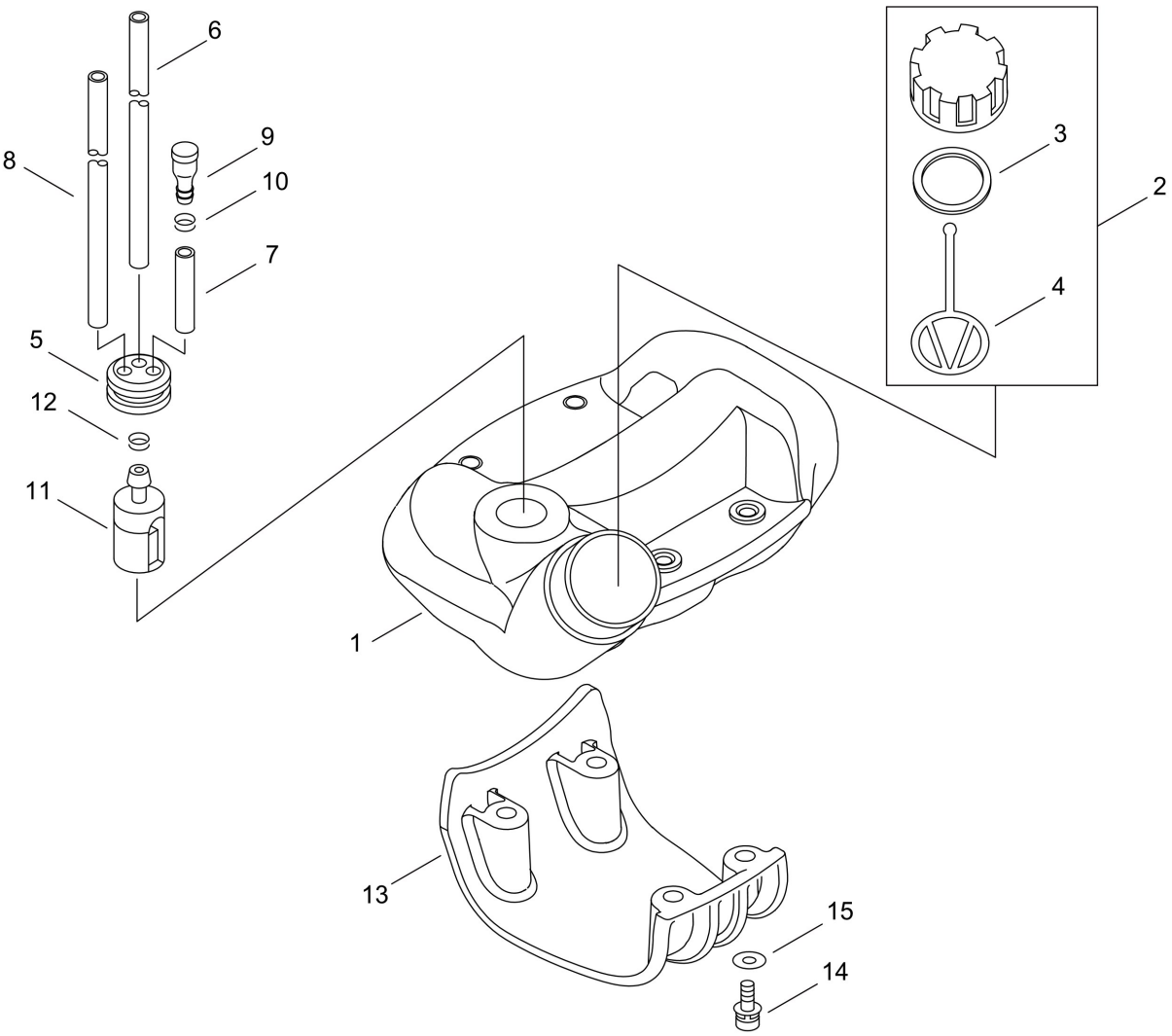

Copyright YAMABIKO EUROPE SA

Illustration 007 FUEL TANK

Nummer	Antal	Kode	Beskrivelse	Vedhæftet fil	Recommended Stock Item	Remark
1	1	A350000440	TANK, FUEL			Slow-moving
2	1	P021012211	CAP,FUEL ASY			Slow-moving
3	1	V107000190	GASKET,FUEL CAP			Fast-moving
4	1	A365000060	CONNECTOR,CAP			Medium-moving
5	1	13211555931	GROMMET, FUEL			Slow-moving
6	1	V470000581	PIPE			Slow-moving
7	1	V471001181	PIPE			Slow-moving
8	1	13201040830	PIPE 3* 6* 75			Slow-moving
9	1	A356000031	VALVE,CHECK			Medium-moving
10	1	V490001230	CLIP			Slow-moving
11	1	A369000450	STRAINER, FUEL			Fast-moving
12	1	V490001240	CLIP			Slow-moving
13	1	A175000030	STAND			Slow-moving
14	4	9111805025	BOLT HSH			Slow-moving
15	4	90060300005	WASHER 5			

Copyright YAMABIKO EUROPE SA

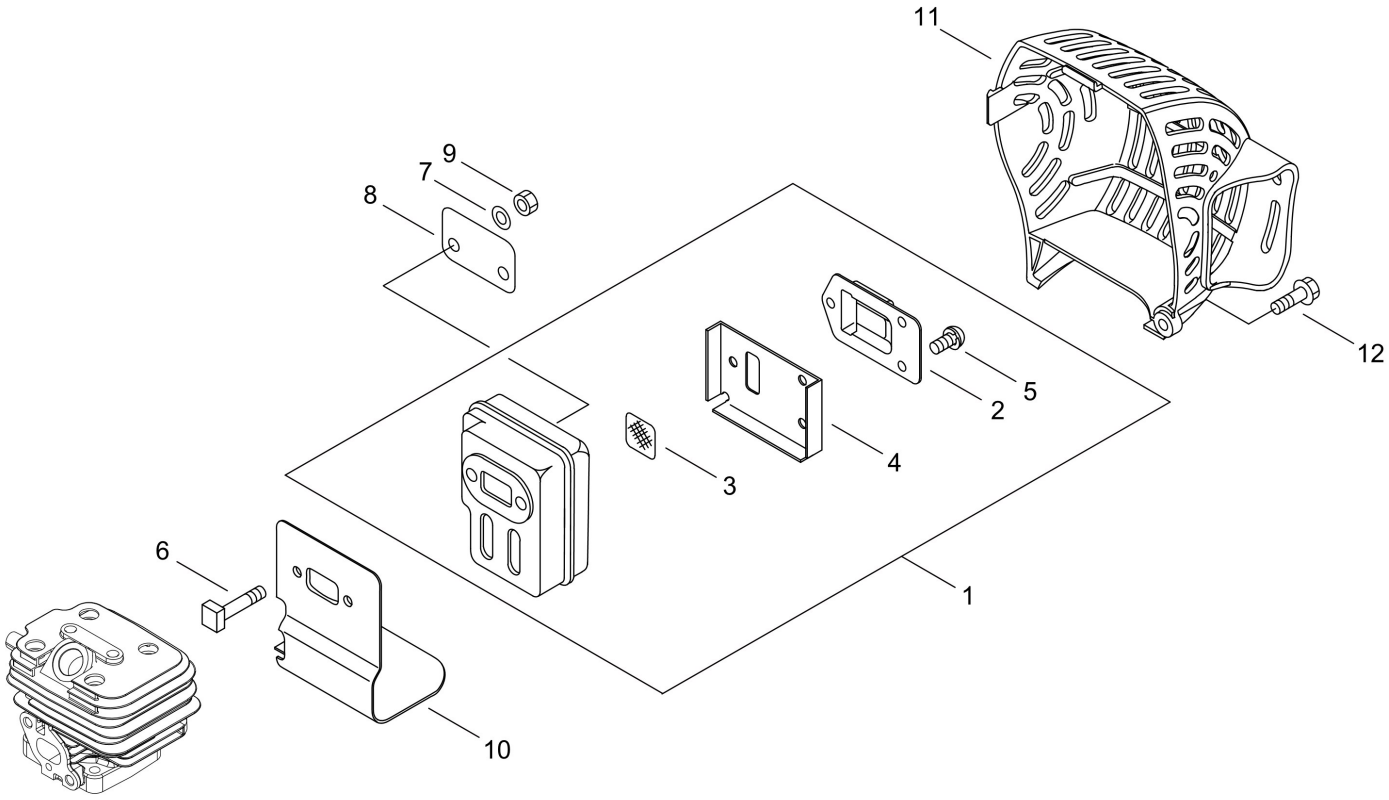

Copyright YAMABIKO EUROPE SA

Illustration 008 MUFFLER

Nummer	Antal	Kode	Beskrivelse	Vedhæftet fil	Recommended Stock Item	Remark
1	1	P021011580	MUFFLER ASY			
2	1	A313000830	GUIDE, EXHAUST			Slow-moving
3	1	14586240630	SCREEN, MUFFLER			Medium-moving
4	1	V104000790	GASKET,EXHAUST			Fast-moving
5	3	9136704010	SCREW			Slow-moving
6	2	V203000120	BOLT,5			Slow-moving
7	2	9228005000	WASHER, NORD-LOCK			
8	1	V150001760	PLATE,EYE			Slow-moving
9	2	90050000005	NUT			
10	1	V104000780	GASKET,EXHAUST			Fast-moving
11	1	A320000342	COVER,MUFFLER			Slow-moving
12	1	9112105016	BOLT, FLANGE			

Copyright YAMABIKO EUROPE SA

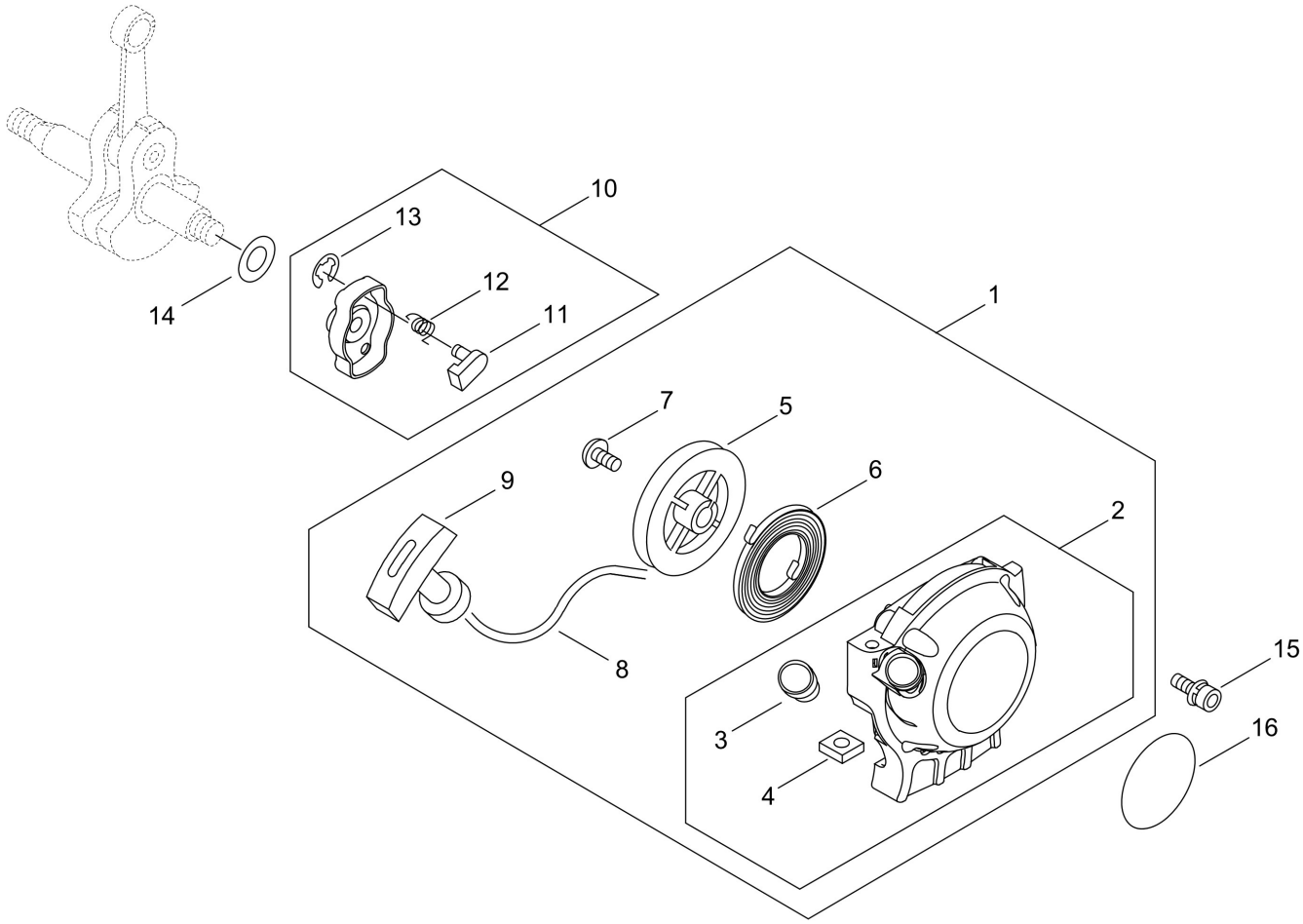

Copyright YAMABIKO EUROPE SA

Illustration 009 RECOIL STARTER, PULLY

Nummer	Antal	Kode	Beskrivelse	Vedhæftet fil	Recommended Stock Item	Remark
1	1	A051001190	STARTER,RECOIL ASY			Medium-moving
2	1	P022052990	STATER CASE			
3	1	P022045770	GUIDE, ROPE			Slow-moving
4	4	90056500005	NUT 5			
5	1	17721540630	DRUM, STARTER			Slow-moving
6	1	17722040630	SPRING, REWIND			Medium-moving
7	1	17723644330	SCREW			Slow-moving
8	1	P022019660	ROPE			
9	1	17722827030	GRIP, STARTER			Slow-moving
10	1	17720240630	PAWL ASM., STARTER			Slow-moving
11	1	P022003120	PAWL, STARTER			
12	1	17723440630	SPRING, RETURN			Slow-moving
13	1	P022002100	E-RING			Slow-moving
14	1	V306000210	WASHER,CIRCULAR 8			Slow-moving
15	4	V202000090	BOLT,4			Slow-moving
16	1	X502000890	LABEL,ECHO			Slow-moving

Copyright YAMABIKO EUROPE SA

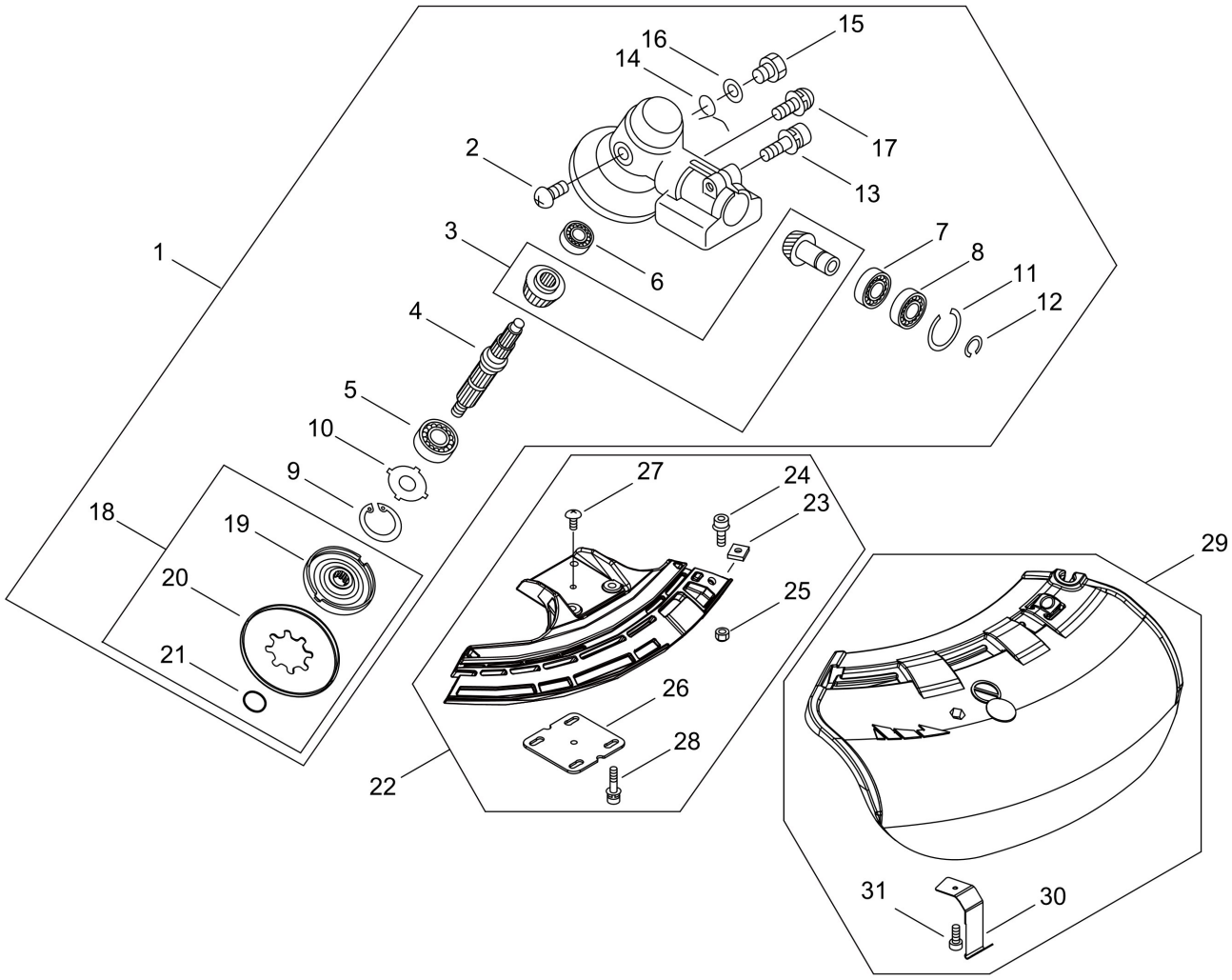

Copyright YAMABIKO EUROPE SA

Illustration 010 GEAR CASE, SHIELD

Nummer	Antal	Kode	Beskrivelse	Vedhæftet fil	Recommended Stock Item	Remark
1	1	P100006872	CASE,GEAR ASY			
2	1	90022004006	SCREW 4* 6			
3	1	61030025531	GEAR SET			Slow-moving
4	1	61031056832	SHAFT, P.T.O.			Slow-moving
5	1	90081206201	BEARING, BALL			
6	1	9406000626	BEARING, BALL			Slow-moving
7	1	9406006900	BEARING BALL			Slow-moving
8	1	9406306900	BEARING BALL			
9	1	90070200032	CIRCLIP 32			
10	1	61044456830	WASHER			Slow-moving
11	1	90070200022	CIRCLIP 22			
12	1	90070600010	RETAINING RING			
13	1	9111806025	BOLT HSH			Slow-moving
14	1	V452001310	SPRING,TORSION			Medium-moving
15	1	61043450031	BOLT 8* 8			Medium-moving
16	1	90060350008	WASHER			Slow-moving
17	1	9111905012	BOLT HSH			Slow-moving
18	1	P100009780	FIXTURE, BLADE SET			Medium-moving
19	1	61031352132	FIXTURE,BLADE			Slow-moving
20	1	61035256830	PLATE, CUP			
21	1	90072000012	O-RING 12			
22	1	P100010890	SHIELD ASY			Medium-moving
23	1	90056500005	NUT 5			
24	1	9112105025	BOLT HSH, FLANGE			Slow-moving
25	1	90056200005	LOCKNUT 5			
26	1	C552000200	PLATE, SHIELD			Slow-moving
27	1	9131604010	SCREW			Slow-moving
28	4	V203001980	BOLT,5			Slow-moving
29	1	P021013775	SHIELD KIT			
30	1	C554000030	KNIFE, CORD			Medium-moving
31	1	9111805018	BOLT			Slow-moving

Copyright YAMABIKO EUROPE SA

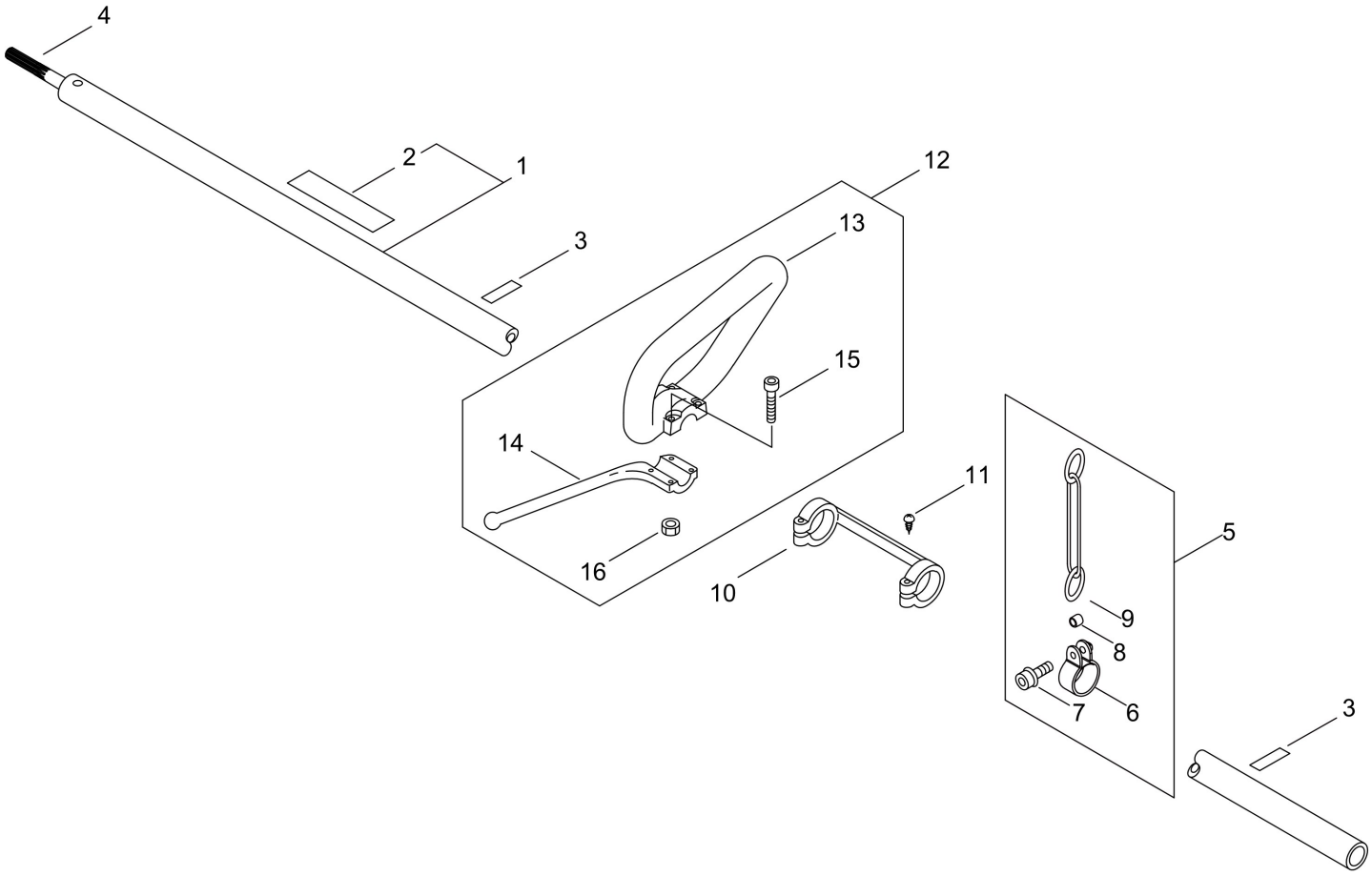

Copyright YAMABIKO EUROPE SA

Illustration 011 MAIN PIPE, HANDLE

Nummer	Antal	Kode	Beskrivelse	Vedhæftet fil	Recommended Stock Item	Remark
1	1	P021045240	MAIN PIPE ASY			
2	1	89061743130	LABEL,CAUTION			Slow-moving
3	2	89015204930	LABEL, CAUTION			Slow-moving
4	1	61001125530	SHAFT, DRIVE			Slow-moving
5	1	P100010900	HOOK ASY			Slow-moving
6	1	30120708930	HOOK			Slow-moving
7	1	9112105016	BOLT, FLANGE			
8	1	69901203330	SPACER			Slow-moving
9	1	30130524330	LINK			Slow-moving
10	1	61028054131	COLLAR			Slow-moving
11	2	90025304025	SCREW, TAPPING			
12	1	P100006820	HANDLE ASY			
13	1	35121440830	HANDLE, FRONT			Slow-moving
14	1	35164351730	BRACET,HANDLE			Slow-moving
15	4	9111805035	BOLT HSH			
16	4	90050000005	NUT			

Copyright YAMABIKO EUROPE SA

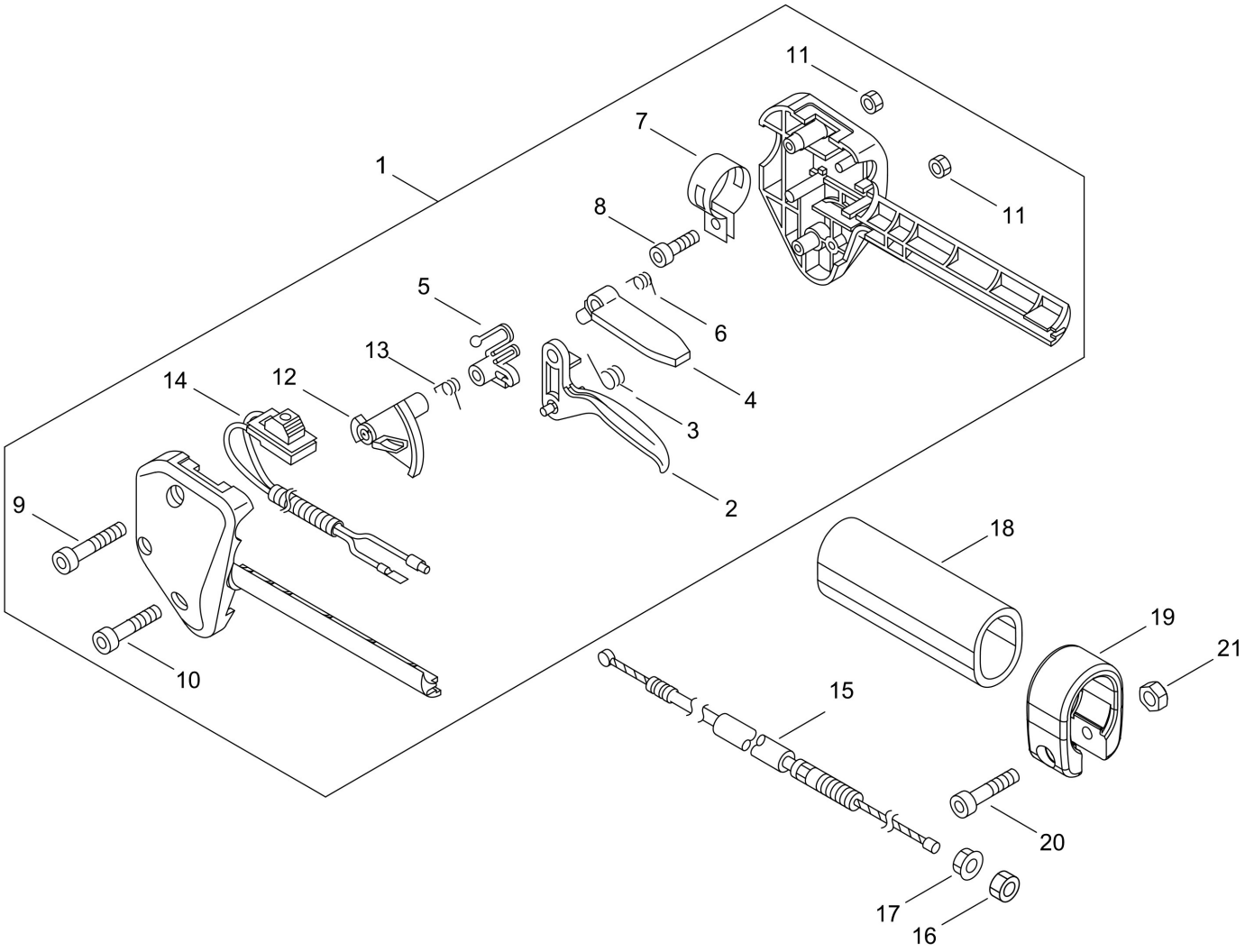

Copyright YAMABIKO EUROPE SA

Illustration 012 THROTTLE

Nummer	Antal	Kode	Beskrivelse	Vedhæftet fil	Recommended Stock Item	Remark
1	1	P100006790	THROTTLE ASY			
2	1	C450000110	TRIGGER,THROTTLE			Slow-moving
3	1	17804342230	SPRING, THR. RETURN			Medium-moving
4	1	17809052632	LOCKOUT, T. CONTROL			Slow-moving
5	1	C461000000	LATCH,THROTTLE			Slow-moving
6	1	17801352630	SPRING, THR. LOCK			Medium-moving
7	1	V495003610	BAND			Slow-moving
8	1	9111805014	BOLT HSH			
9	1	9111805035	BOLT HSH			
10	1	9111805025	BOLT HSH			Slow-moving
11	2	90050000005	NUT			
12	1	C461000010	LATCH,THROTTLE			Slow-moving
13	1	V452000120	SPRING,TORSION			Medium-moving
14	1	A440001131	SWITCH, ON OFF			Slow-moving
15	1	V430002360	CABLE,BOWDEN			Medium-moving
16	1	90050200006	NUT 6 #3			
17	1	90051800006	NUT, FLANGE			
18	1	C403000140	GRIP, HANDLE			Slow-moving
19	1	61027252130	BAND 25			Slow-moving
20	1	9111805028	BOLT HSH			Slow-moving
21	1	90050000005	NUT			

Copyright YAMABIKO EUROPE SA

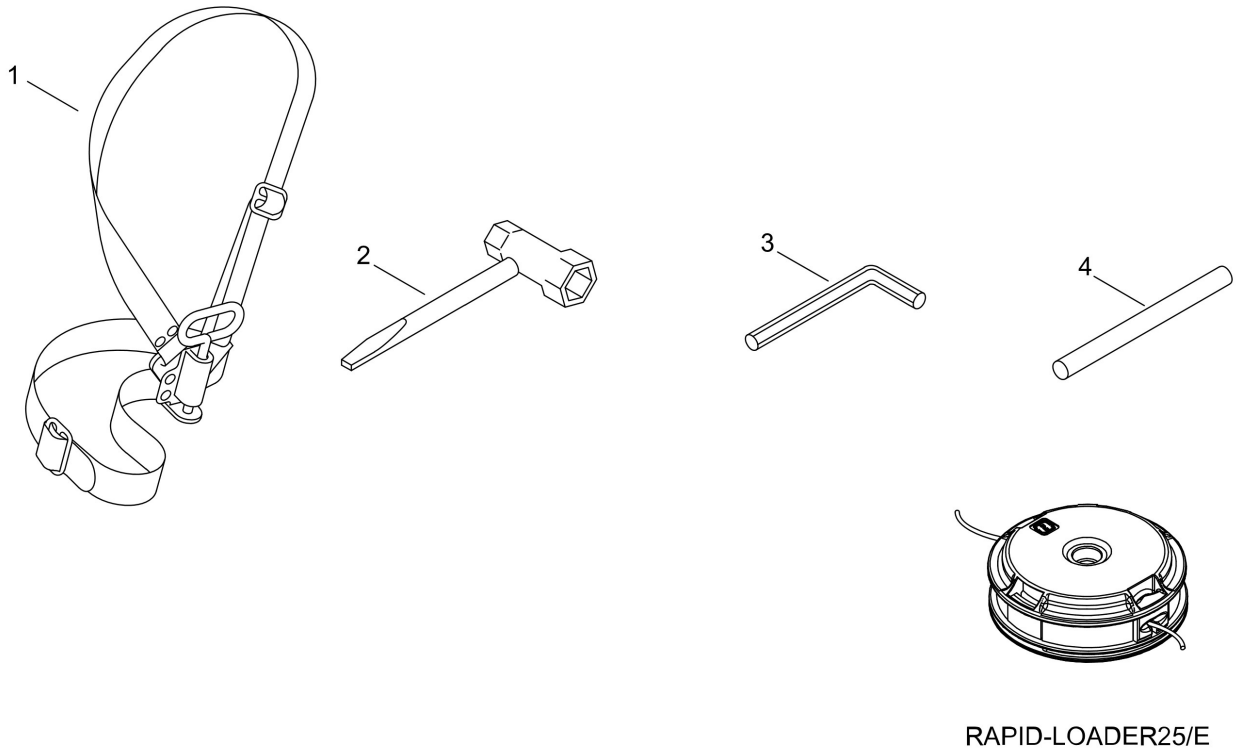

RAPID-LOADER25/E

Copyright YAMABIKO EUROPE SA

Illustration 013 ACCESSORIES

Nummer	Antal	Kode	Beskrivelse	Vedhæftet fil	Recommended Stock Item	Remark
1	1	30100146732	HARNESS, SHOULDER			Medium-moving
2	1	X602000020	TOOL,WRENCH			Slow-moving
3	1	X605000200	TOOL,L WRENCH			Slow-moving
4	1	X606000080	TOOL,BAR			Slow-moving

Copyright YAMABIKO EUROPE SA