CS-6700



Dokumenter

air filter, exhaust

Carburettor HAD-76

Clutch, chain brake, cutting set

handles, petrol tank

Motor, housing, cover, oil tank

oil pump

special tools

starter, ignition

Copyright YAMABIKO EUROPE SA

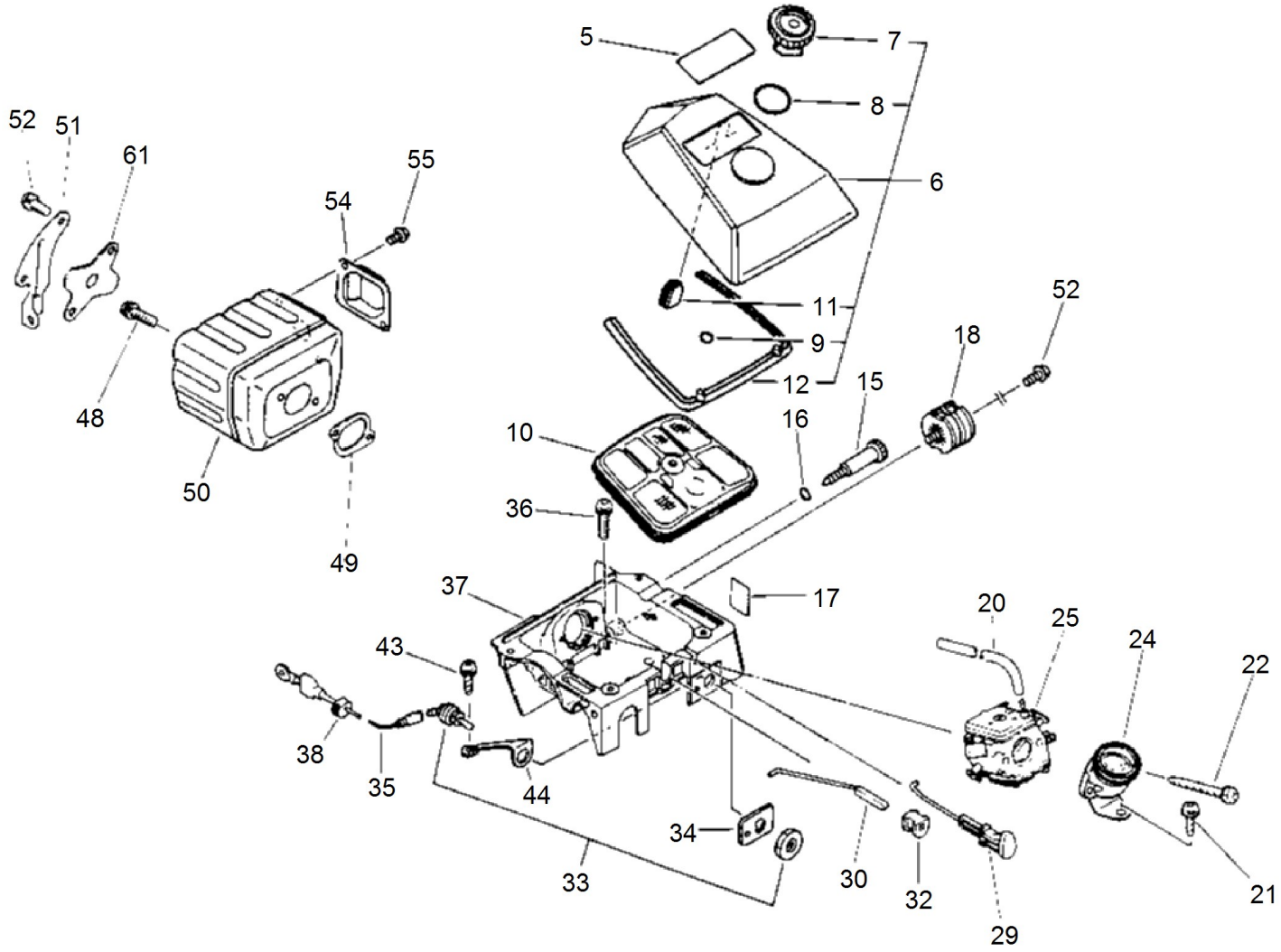

Copyright YAMABIKO EUROPE SA

Illustration air filter, exhaust

Nummer	Antal	Kode	Beskrivelse	Vedhæftet fil	Recommended Stock Item	Remark
5	1	89015132630	Label, Model			Slow-moving
6	1	13030232530	COVER ASSY, AIR CLN.			
7	1	13040632530	Thumbscrew CS-8000, CS-8001			
8	1	90072000022	O-RING 22			
9	1	90072000010	O RING			
10	1	13030032431	AIR, CLEANER ASS'Y			Fast-moving
11	1	13033832430	PLUG, COVER			Medium-moving
12	1	13036532430	Rubber, Air Cleaner			Fast-moving
15	1	12901330831	BOLT			Slow-moving
16	1	90072000007	O RING			
17	1	36888888	HONDA GX-160 ENGINE			
18	1	10090532430	Cushion			
20	1	13201013932	Pipe, Fuel			Slow-moving
21	1	90028505014	bolt			
22	2	36888888	HONDA GX-160 ENGINE			
24	1	13051832431	FUNNEL			Slow-moving
25	1	12300032430	CARBURETOR			
29	1	17851032430	Rod Choke			
30	1	17801132430	ROD THROTTLE			
32	1	17811432430	Bracket			
33	1	16340030830	SWITCH, IGNITION			Slow-moving
34	1	89015719830	Label, Switch			Slow-moving
35	1	16202230131	Lead, Ground			Slow-moving
36	1	90016205020	BOLT HSH	Y2020-682		
37	1	13030632430	Case, Carburetor (BS)			
38	1	15611404920	GROMMET			Slow-moving
43	1	90025204010	SCREW 4*10			
44	1	15663532430	PLATE, GROUND			Slow-moving
48	6	90028105020	BOLT			
49	1	14551032430	GASKET			Fast-moving
50	1	14561032430	MUFFLER			Slow-moving
51	1	14571132430	BRACKET, MUFFLER			Slow-moving
52	2	90028105014	BOLT			
54	1	14586132430	lid, muffler			Slow-moving
55	2	90024204010	SCREW 4*10			
61	1	14581331730	cover, muffler			Slow-moving

Copyright YAMABIKO EUROPE SA

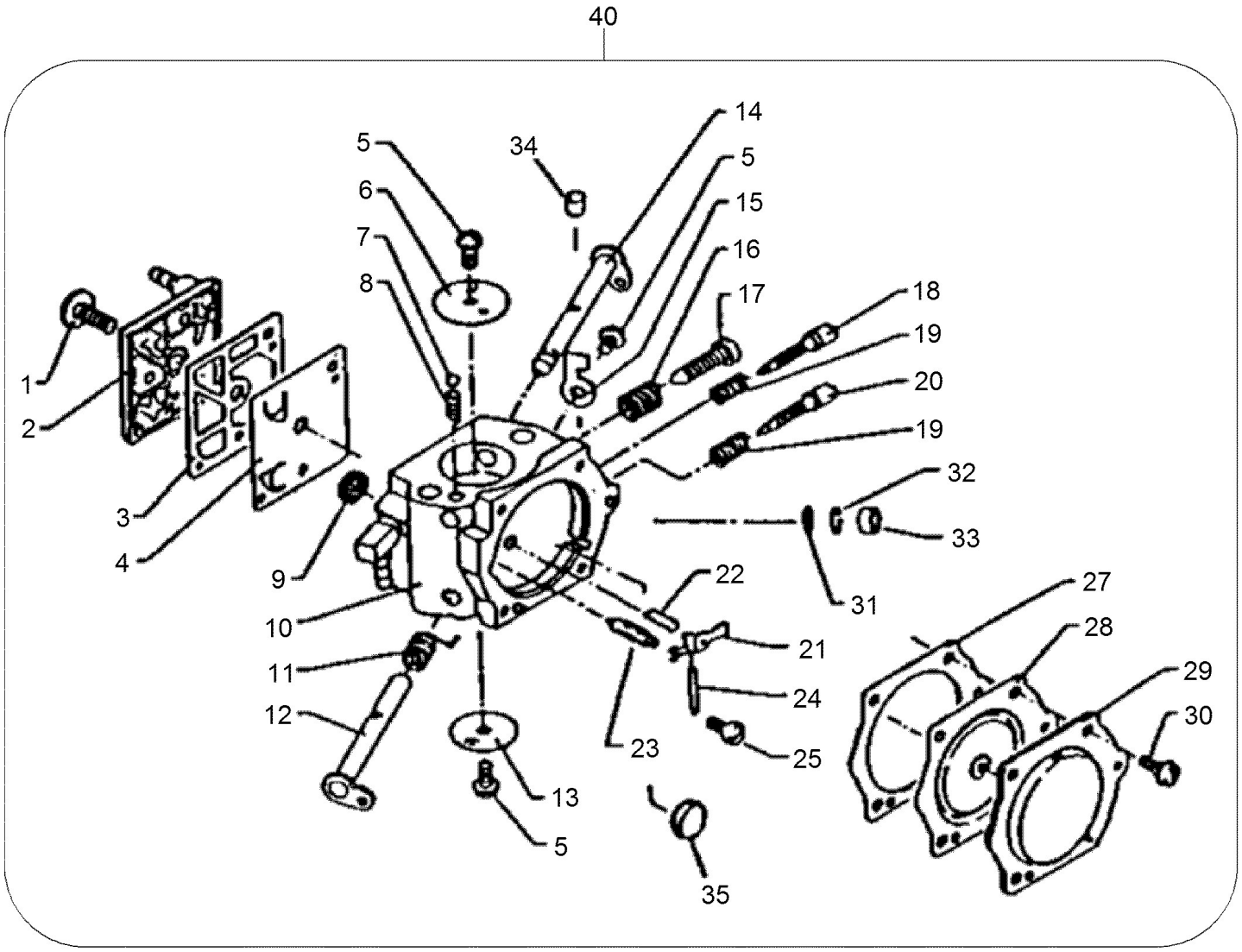

Copyright YAMABIKO EUROPE SA

Illustration Carburettor HAD-76

Nummer	Antal	Kode	Beskrivelse	Vedhæftet fil	Recommended Stock Item	Remark
1	1	12311016130	SCREW, PUMP COVER			Slow-moving
2	1	12312419830	Cover, Fuel Pump			Slow-moving
3	1	12312512330	GASKET, FUEL PUMP			Fast-moving
4	1	12311212330	DIAPHRAGM, FUEL PUMP			Fast-moving
5	3	12311403930	BOLT			
6	1	12313217330	Valve, Choke			
7	1	12313610630	BALL, CHOKE FRICTION			Slow-moving
8	1	12313510630	SPRING, CHOKE FRICT.			Slow-moving
9	1	12312610631	SCREEN, INLET			Medium-moving
10	1	36888888	HONDA GX-160 ENGINE			
11	1	12311316130	Spring			
12	1	12311732430	ROD THROTTLE			
13	1	12313216130	VALVE			Slow-moving
14	1	12313119830	SHAFT, CHOKE			
15	1	12315612330	STOP, THROTTLE			
16	1	12313311130	Spring			Slow-moving
17	1	12313406530	Adjusting screw, PB-400E			
18	1	12311818331	ADJUST SCREW			Slow-moving
19	1	12312103930	Spring			Slow-moving
20	1	12312018330	ADJUST SCREW			Slow-moving
21	1	12312318330	LEVER, METERING			Slow-moving
22	1	12312203930	Spring, Meter Lever			Slow-moving
23	1	12313716130	Einlassventil			
24	1	12313803930	PIN, METERING LEVER			Slow-moving
25	1	12313903930	SCREW, M. LEVER PIN			Slow-moving
27	1	12314016130	GASKET, M. DIAPHRAGM			Fast-moving
28	1	12314116131	DIAPHRAGM			
29	1	12314217330	COVER, M. DIAPHRAGM			Slow-moving
30	4	12313002960	SCREW			Slow-moving
31	1	12316810631	Screen			
32	1	12316910630	Ring, Retaining			
33	1	12314617330	Plug, Cup			
34	1	12317815030	Plug, Friction			
35	1	12314610630	PLUG, WELCH			
40	1	12300032430	CARBURETOR			

Copyright YAMABIKO EUROPE SA

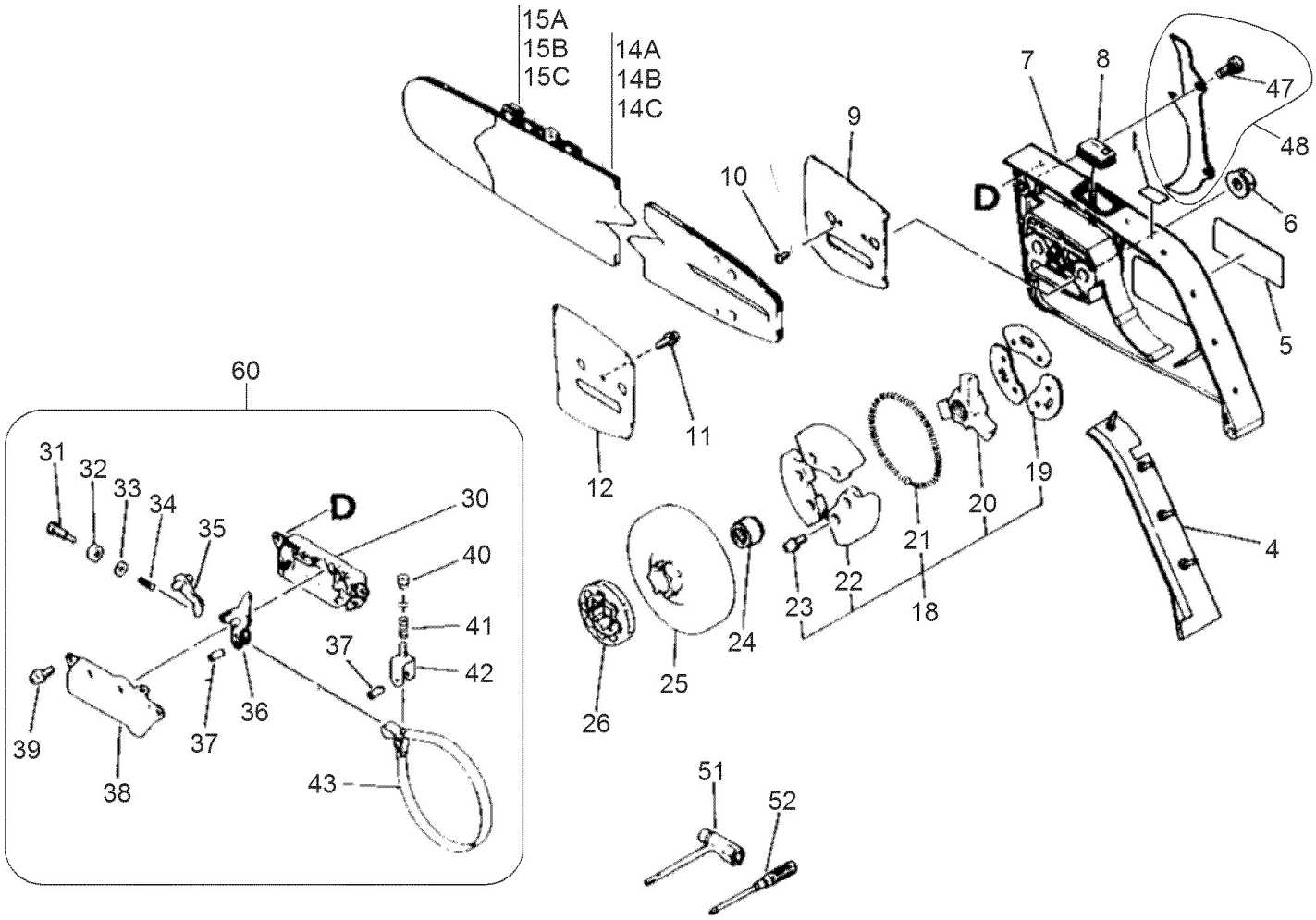

Copyright YAMABIKO EUROPE SA

Illustration Clutch, chain brake, cutting set

Nummer	Antal	Kode	Beskrivelse	Vedhæftet fil	Recommended Stock Item	Remark
4	1	43302532430	Pad			Medium-moving
5	1	89011818331	Lable			Slow-moving
6	2	43301912330	NUT, FLANGE 8			Slow-moving
7	1	43300232430	Guard, Sprocket			
8	1	43331219930	Protection			Slow-moving
9	1	43301230830	PLATE, GUIDE (OUTER)			Slow-moving
10	1	90024103006	SCREW			
11	1	90028104010	Screw 4*10			
12	1	43301330830	PLATE			Slow-moving
14A	1	KE40153860	Saw chain - 40cm 60 drive links, pitch 3/8"			
14B	1	KE45153864	Saw chain - 45cm 64 drive links, pitch 3/8"			
14C	1	KE50153872	SAW CHAIN 20" 73DP-72X / 18048-00720			
15A	1	S40RS583/8	BAR GUIDE 40RS-3/8/430211-30832			
15B	1	S45RS583/8	Bar for Chain Saw			
15C	1	S50RS583/8	Bar for Chain Saw			
18	1	17500032430	Clutch Ass`y			Medium-moving
19	3	17501916130	PLATE			Slow-moving
20	1	17501632430	Hab clutch			Medium-moving
21	1	17501832430	SPRING, CLUTCH			Medium-moving
22	1	17500216130	Shoe Clutch			
23	6	90028104008	Screw 4*8			
24	1	17501232430	BEARING, NEEDLE			Slow-moving
25	1	17510532430	DRUM, CLUTCH			Medium-moving
26	1	17503314731	SPROCKET, RIM 68210S			Medium-moving
30	1	43330619930	Cover			Slow-moving
31	1	43313319930	BOLT			Slow-moving
32	1	90050200005	Nut 5 (3N)			
33	1	43316219930	Washer			Slow-moving
34	1	43312219930	Spring			Medium-moving
35	1	43320919930	LEVER			Slow-moving
36	1	43320819930	Lever, Brake			Slow-moving
37	2	90034040010	Pin, Spring 4*10			
38	1	43331019930	Cover			
39	2	90028104010	Screw 4*10			
40	1	43316919931	Nut, Adjusting			Slow-moving
41	1	43316119930	Spring			Medium-moving
42	1	43314219931	ADJUSTER ASSY			Slow-moving
43	1	43312330830	BRAKE BAND			Slow-moving
47	2	88021130130	BOLT			Slow-moving
48	1	88020032430	Bumper, Spiked			
51	1	89541002830	WRENCH, W/S. DRIVER			Slow-moving

Copyright YAMABIKO EUROPE SA

Illustration Clutch, chain brake, cutting set

Nummer	Antal	Kode	Beskrivelse	Vedhæftet fil	Recommended Stock Item	Remark
52	1	89581203930	SCREWDRIVER 50			Slow-moving
60	1	43320230830	BRAKE KIT, CHAIN			

Copyright YAMABIKO EUROPE SA

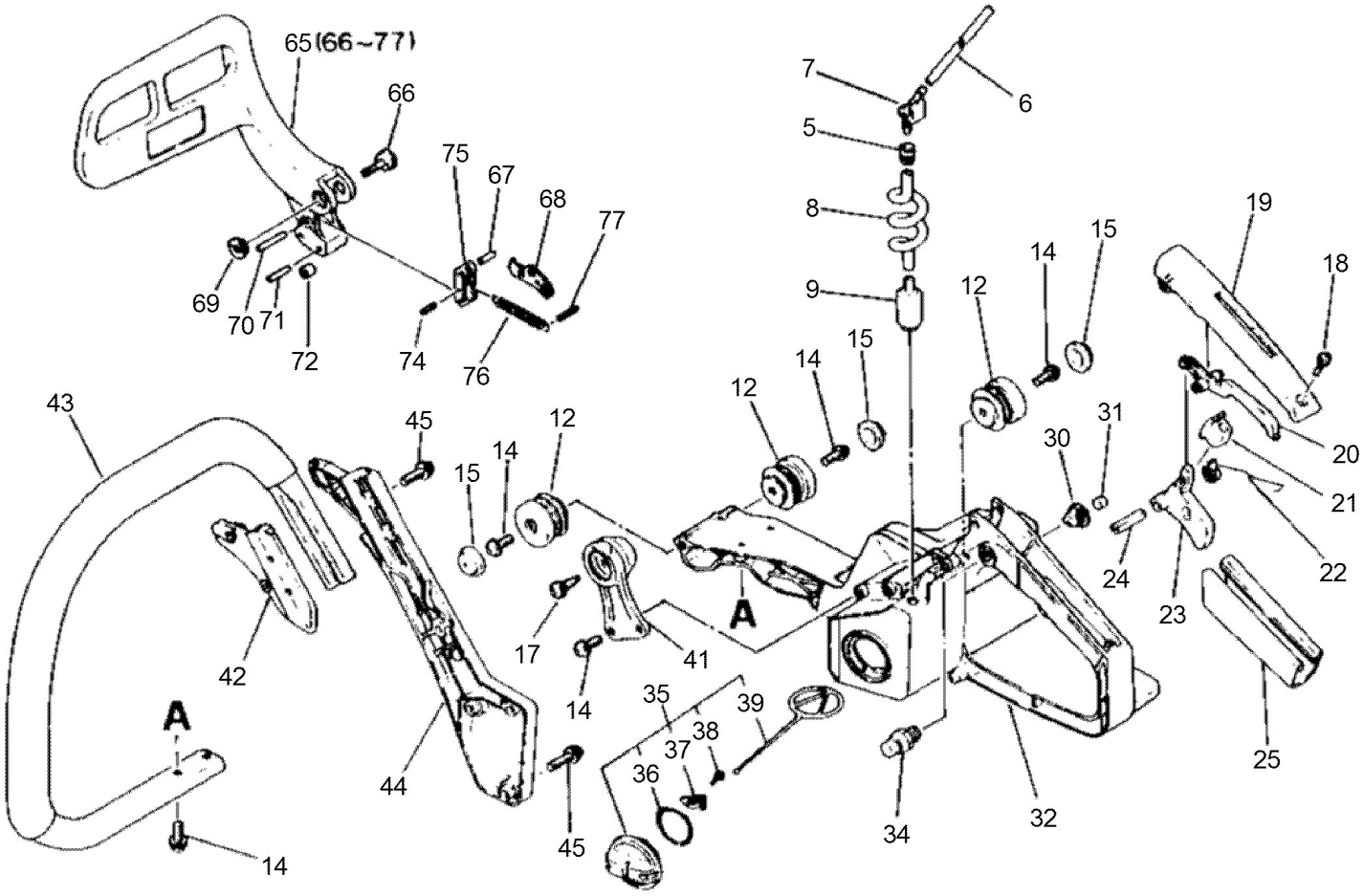

Copyright YAMABIKO EUROPE SA

Illustration handles, petrol tank

Nummer	Antal	Kode	Beskrivelse	Vedhæftet fil	Recommended Stock Item	Remark
5	2	13211501460	GASKET			Slow-moving
6	1	13201232430	Pipe, Vent			
7	1	13201119830	Connector, Fuel Pipe			Slow-moving
8	1	13201030830	Pipe, Fuel			Slow-moving
9	1	13120500230	fuel filter			Fast-moving
12	3	10091032430	CUSHION (A)			Medium-moving
14	3	90028105014	BOLT			
15	3	10091819830	CAP. CUSHION			Slow-moving
17	1	90028105014	BOLT			
18	1	90028104014	BOLT			
19	1	35115530130	handle cover			
20	1	17809030130	LOCK LEVER			Slow-moving
21	1	17807332430	CUSHION, THROTTLE			Medium-moving
22	1	17804319830	Spring			Medium-moving
23	1	17801019830	LEVER, THROTTLE			Slow-moving
24	1	90034550025	TENSIONER, CHAIN			
25	1	35111119830	Grip			Slow-moving
30	1	13131406320	VALVE, CHECK			Medium-moving
31	1	13131505020	FILTER			Slow-moving
32	1	35110332630	Handle housing production stopped!!			
34	1	17830212330	LATCH, THROTTLE			
35	1	13100419830	Tank cap (plastic)			
36	1	90072000029	O-RING			
37	1	13105019830	HOLDER			Slow-moving
38	1	90025803008	Screw 4*8			
39	1	13105119830	LINK			Medium-moving
41	1	10092132430	Gummipuffer			Medium-moving
42	1	35161432430	Bracket, f. Hndl. (BS)			Slow-moving
43	1	35160632430	Handle, Front			Slow-moving
44	1	35161332430	SUPPORTER, HANDLE			
45	5	90028105020	BOLT			
65	1	43320132630	Lever Assy, Brake			
66	1	43311330130	SCREW			Slow-moving
67	1	90033040120	Bolt 4x12 (10)			
68	1	43316332430	PLATE, CUTTER			Slow-moving
69	1	43313730130	NUT			Slow-moving
70	1	90033030240	Pin 3*24			
71	1	90033030180	BOLT			
72	1	43316819930	Spacer (B)			Slow-moving
74	1	90034530012	PIN, SRING 3*12SUS			
75	1	43317032430	TRIGGER MANUAL			Slow-moving
76	1	43311430130	SPRING			Medium-moving
77	1	90034530016	Pin, Spring 3*16SUS			

Copyright YAMABIKO EUROPE SA

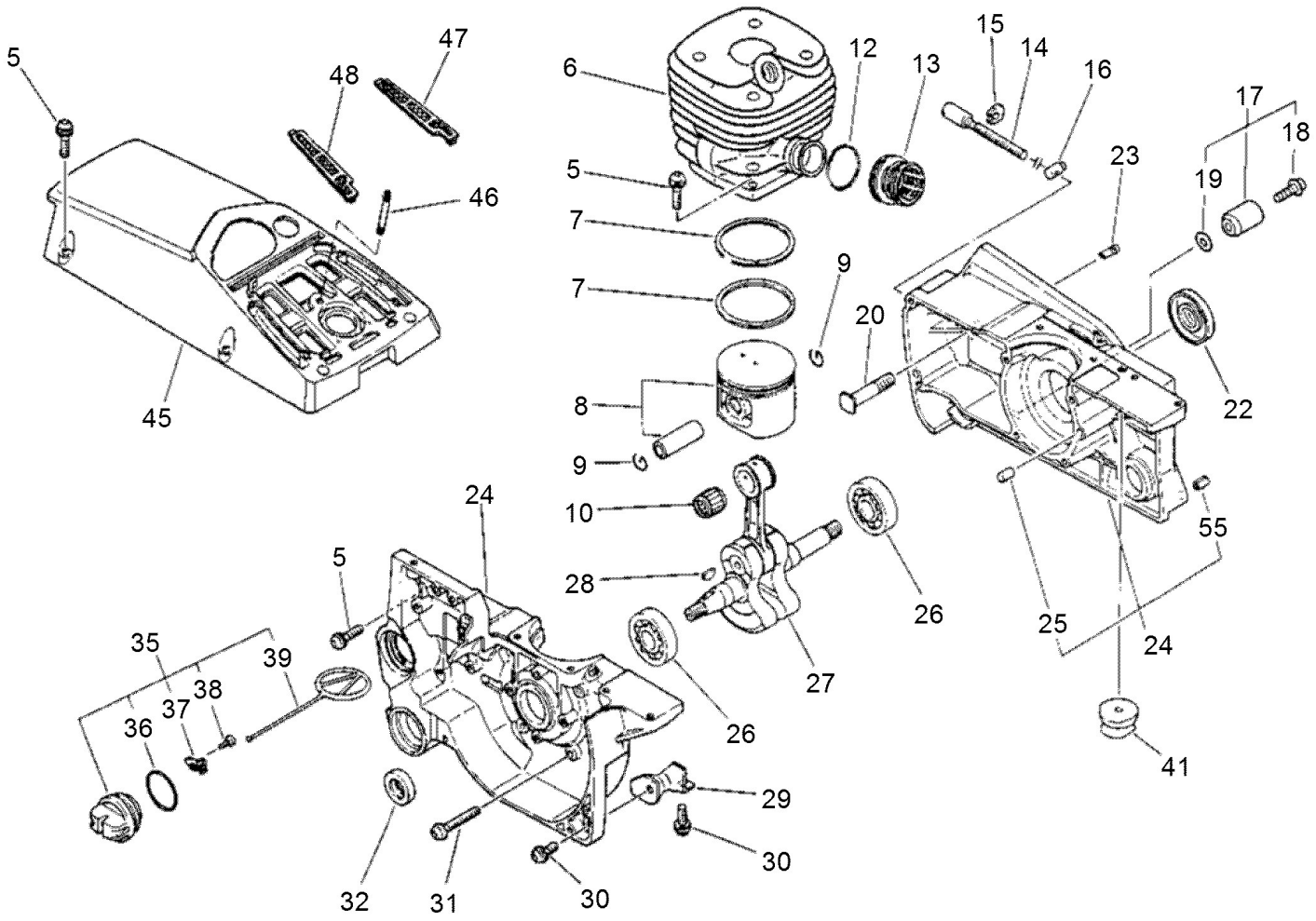

Copyright YAMABIKO EUROPE SA

Illustration Motor, housing, cover, oil tank

Nummer	Antal	Kode	Beskrivelse	Vedhæftet fil	Recommended Stock Item	Remark
5	11	90028105020	BOLT			
6	1	10100532430	Zylinder			Slow-moving
7	2	10001132430	RING, PISTON			Medium-moving
8	1	10000332430	Piston Kit			
9	2	10001500230	GRIP RING			Slow-moving
10	1	10001232430	BEARING, NEEDLE			Slow-moving
12	1	13051630830	TAPE			Medium-moving
13	1	13051032430	ADAPTER, INTAKE			Slow-moving
14	1	43301611031	SCREW, TENSIONER			Slow-moving
15	1	43302811030	CLIP			Slow-moving
16	1	43301402830	TENSIONER			Slow-moving
17	1	43300019831	CATCHER KIT, CHAIN			
18	1	90028105020	BOLT			
19	1	90060000005	WASHER 5			
20	1	43301119830	BOLT			Slow-moving
22	1	10021232430	OILSEAL (L)			Slow-moving
23	1	43611413930	VALVE, CHECK			Medium-moving
24	1	10030132431	Crankcase Set (BS)			
25	2	10021502830	Bolt			Slow-moving
26	1	10012119830	BEARING, BALL			
27	1	10010032430	CRANK SHAFT			Slow-moving
28	1	10014230830	KEY, WOODRUFF			Slow-moving
29	1	10091732430	Cushion (B)			Medium-moving
30	1	90028105014	BOLT			
31	4	90028105035	SCREW 5X25			
32	1	10021219830	Oilseal			Slow-moving
35	1	43600119832	CAP ASSY, OIL			
36	1	43601219830	O-ring CS-3600,-3900,-4601			
37	1	13105019830	HOLDER			Slow-moving
38	1	90025803008	Screw 4*8			
39	1	13105119830	LINK			Medium-moving
41	1	10025132430	CUSHION (A)			Medium-moving
45	1	10150632630	COVER CYLINDER ASSY			
46	1	10101405931	Bolt			
47	1	13082232330	Filter (R)			Slow-moving
48	1	13082332330	Filter (L)			Slow-moving
55	1	90034550025	TENSIONER, CHAIN			

Copyright YAMABIKO EUROPE SA

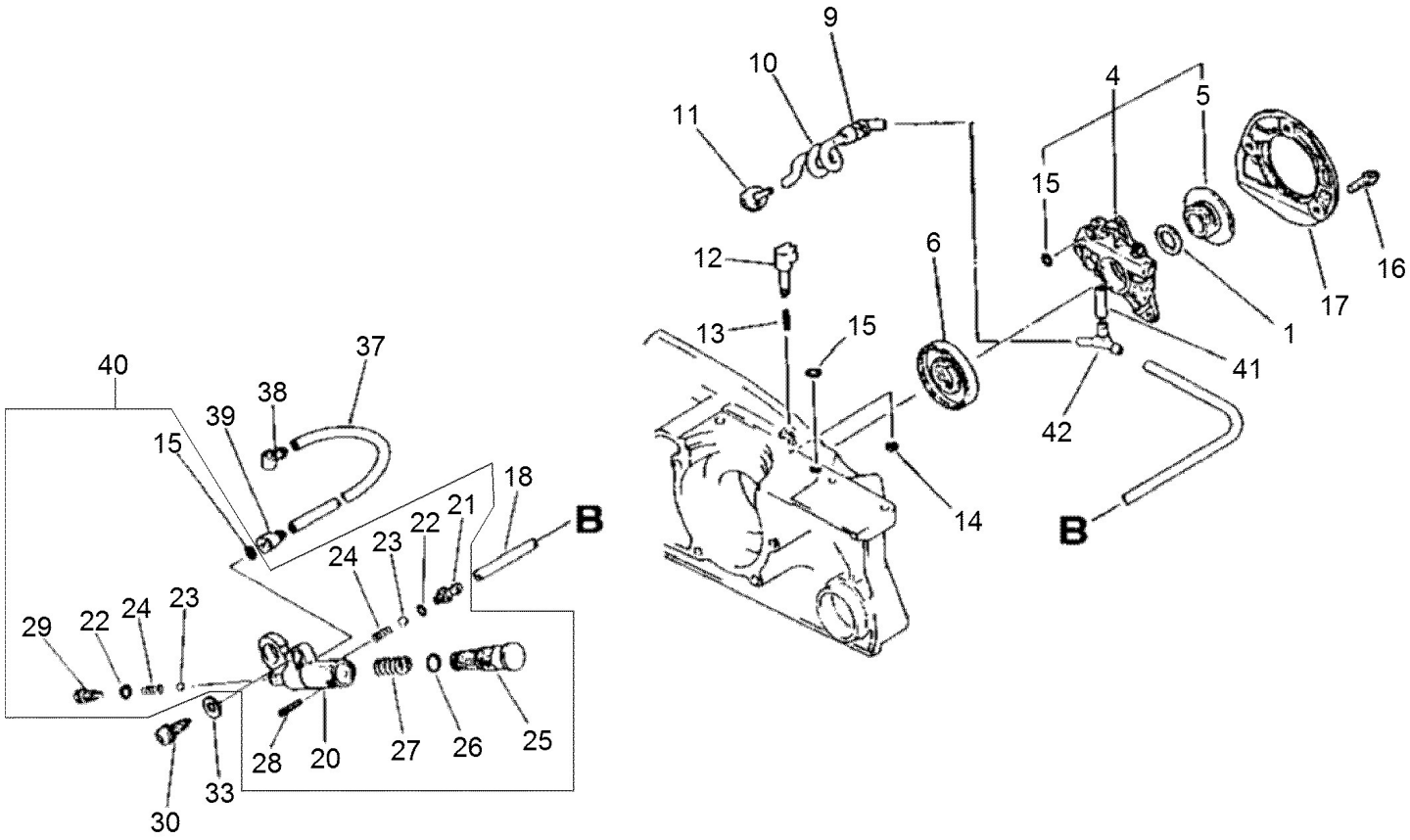

Copyright YAMABIKO EUROPE SA

Illustration oil pump

Nummer	Antal	Kode	Beskrivelse	Vedhæftet fil	Recommended Stock Item	Remark
1	1	10012719830	Washer, Adjusting			Slow-moving
4	1	43700032630	oil pump zsb.			Slow-moving
5	1	43706332430	gear			Medium-moving
6	1	10021232430	OILSEAL (L)			Slow-moving
9	1	13211512330	grommet			Slow-moving
10	1	43721032430	Pipe, Oil			Slow-moving
11	1	43620514730	STRAINER, OIL			Medium-moving
12	1	43703919831	PIN;CONTROL			Slow-moving
13	1	43701519830	Spring			Medium-moving
14	1	90070000003	E-Ring			
15	3	90072000003	O-RING			
16	3	90028104014	BOLT			
17	1	43760532430	Cover, Oil Pump	2008-394B		Slow-moving
18	1	43721015130	Pipe, Oil			Slow-moving
20	1	43711019831	BODY, OIL PUMP			Slow-moving
21	1	43711819830	Nipple			Slow-moving
22	2	43712203430	O RING			Fast-moving
23	2	43701200330	Valve, Ball			Slow-moving
24	2	43701300330	Spring, Valve			Medium-moving
25	1	43711219831	PISTON, MANUAL			Slow-moving
26	1	90072000007	O RING			
27	1	43711119830	Spring			Medium-moving
28	1	90034520016	TENSIONER, CHAIN			
29	1	43712110130	BOLT			Slow-moving
30	1	36888888	HONDA GX-160 ENGINE			
33	1	90060300005	WASHER 5			
37	1	43721632630	Pipe			Slow-moving
38	1	43723232630	Connector			Slow-moving
39	1	43721232630	Connector			Slow-moving
40	1	43710019831	Oil Pump Ass'y			
41	1	43721132430	Pipe			Slow-moving
42	1	43721232430	Connector			Slow-moving

Copyright YAMABIKO EUROPE SA

Spezialwerkzeuge

1 a = 4 mm 2 a = 5 mm 3 a = 3 mm 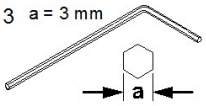	4 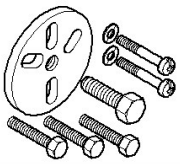	5 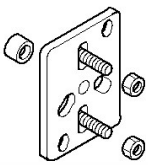	6 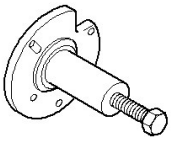	7 	8 
	10 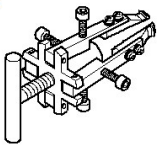	11 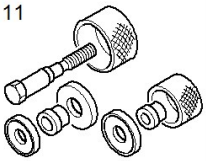	12 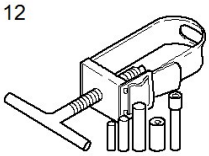	13 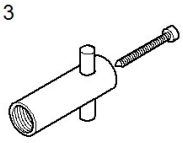	
14 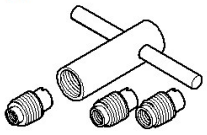	15 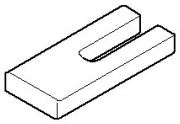	16 b = 4 mm 17 b = 5 mm 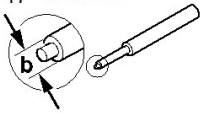	18 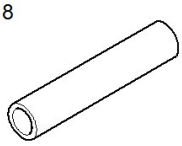	19 c = 12 mm 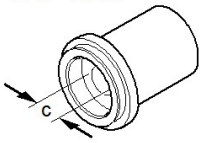	
21 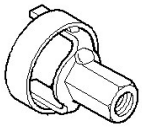		23 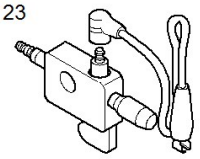	24 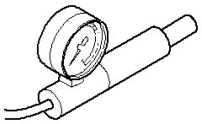	25 	

Copyright YAMABIKO EUROPE SA

Illustration special tools

Nummer	Antal	Kode	Beskrivelse	Vedhæftet fil	Recommended Stock Item	Remark
1		WA89561079920	L-WRENCH (4MM)			
2		WA89561179920	L-WRENCH (5MM)			
3		WAX605000180	TOOL,L WRENCH			
4		WA89750000335	PULLER			
5		WA89750103938	Puller, Magneto			
6		WA89750219830	puller			
7		WA89750516131	TOOL CLUTCH			
8		WA89753703930	STOPPER PISTON			
10		WA89770019830	Oil seal remover			
11		WA89770114732	TOOL BEARING EXTRACT			
12		WA89770230131	TOOL, PISTON PIN			
13		WA89770819831	Oil pump drive puller			
14		WA89770837530	Mounting aid oil pump			
15		WA89771902830	Holder, Piston			
16		WA89772401361	TOOL, SPRING PIN 4MM			
17		WA89772402831	TOOL, SPRING PIN 5MM			
18		WA89772621430	OIL SEAL TOOL			
19		WA89772719830	TOOL, OILSEAL			
21		WA89774019830	TOOL, CUSHION			
23		WA89780079931	TESTER SPARK			
24		WA89780330130	PRESSURE TESTER			
25		WA89782716131	Ejector plate 280,330,400,4000 3600,3900,4601,5500,6700,8000			

Copyright YAMABIKO EUROPE SA

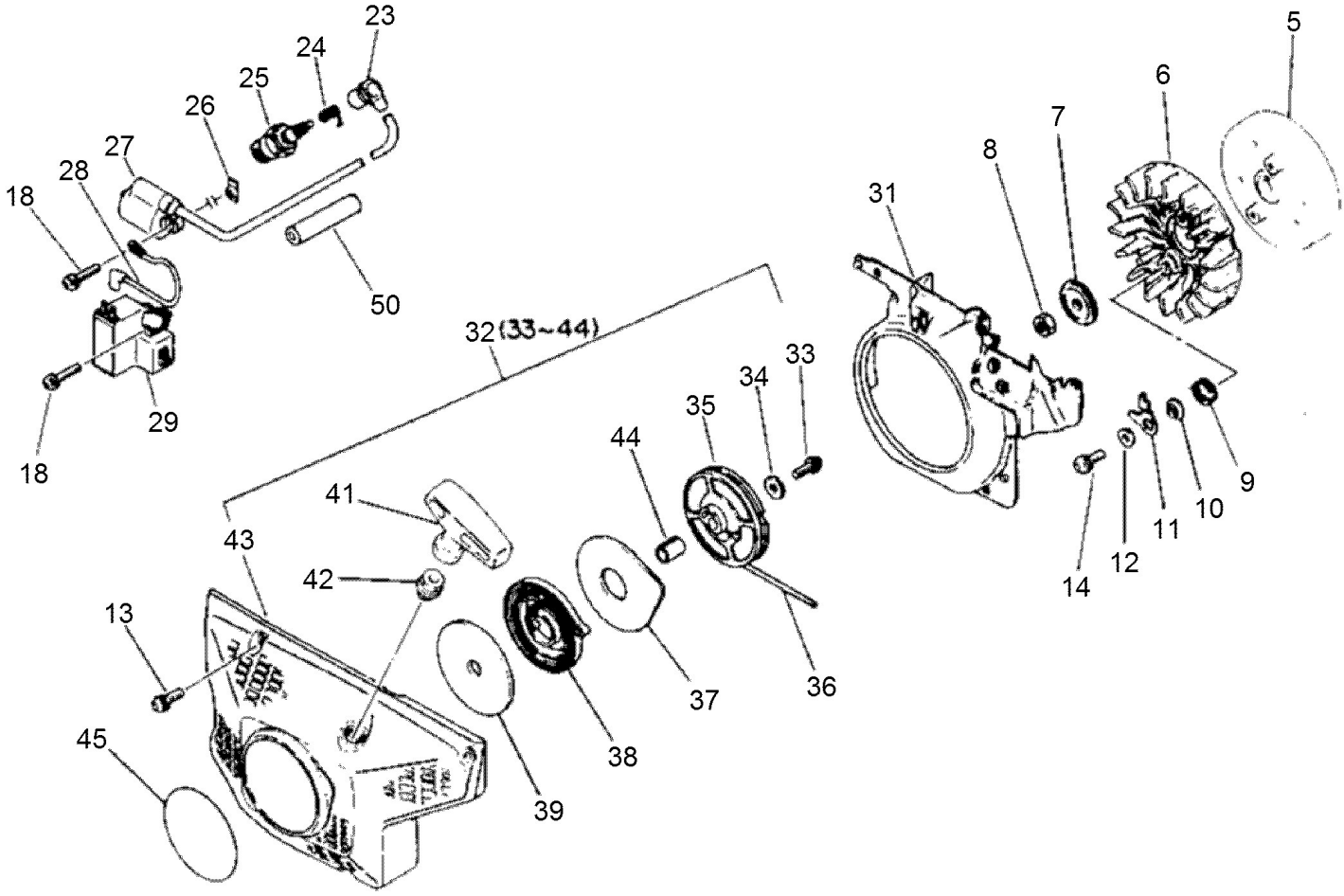

Copyright YAMABIKO EUROPE SA

Illustration starter, ignition

Nummer	Antal	Kode	Beskrivelse	Vedhæftet fil	Recommended Stock Item	Remark
5	1	15680030131	ROTOR			Slow-moving
6	1	10152132430	Fan, Cooling			Slow-moving
7	1	10014319830	WASHER			Slow-moving
8	1	90050000008	NUT 8			
9	2	17723430830	Spring, Return			Medium-moving
10	2	17724712330	Spacer, Ratchet			Slow-moving
11	2	17721832430	PAWL, STARTER			Slow-moving
12	2	90060300005	WASHER 5			
13	4	90028105020	BOLT			
14	2	90028105025	SCREW 5X25			
18	4	90028104020	Screw 4*20			
23	1	15901203433	CAP, SPARK PLUG			Slow-moving
24	1	15901103432	COIL, SPARK PLUG CAP			Slow-moving
25	1	15901716431	spark plug			Fast-moving
26	1	15661830130	NUT			Slow-moving
27	1	15662632630	Coil, Ignition			Slow-moving
28	1	15663030130	Lead			Slow-moving
29	1	15660130131	C.D. Ignition Module			Slow-moving
31	1	10153532430	CASE, STARTER			Slow-moving
32	1	36888888	HONDA GX-160 ENGINE			
33	1	90028105014	BOLT			
34	1	17721402830	WASHER			Slow-moving
35	1	17720614330	DRUM, STARTER			
36	1	17722602830	ROPE, STARTER			Medium-moving
37	1	17724230830	Plate, Starter			Slow-moving
38	1	17722002834	SPRING, REWIND			Medium-moving
39	1	17722102830	PLATE, STARTER			Slow-moving
41	1	17722830830	GRIP, STARTER			Slow-moving
42	1	17722705020	Guide, Rope			Slow-moving
43	1	10150732430	starter cap			
44	1	17721612330	COLLAR			Slow-moving
45	1	89011218331	Lable			Slow-moving
50	1	15061132430	PIPE			Slow-moving

Copyright YAMABIKO EUROPE SA