CS-420ES (38000001-)

Dokumenter

01_CYLINDER__PISTON__CRANKSHAFT
02_ENGINE_COVER
03_MAGNETO
04_AIR CLEANER, CARBURETOR
05_CARBURETOR
06_MUFFLER
07_RECOIL_STARTER
08_HANDLE
09_CHAIN_BRAKE
10_ACCESSORIES
11_OILER
12_GUIDE_BAR__CHAIN

Copyright YAMABIKO EUROPE SA

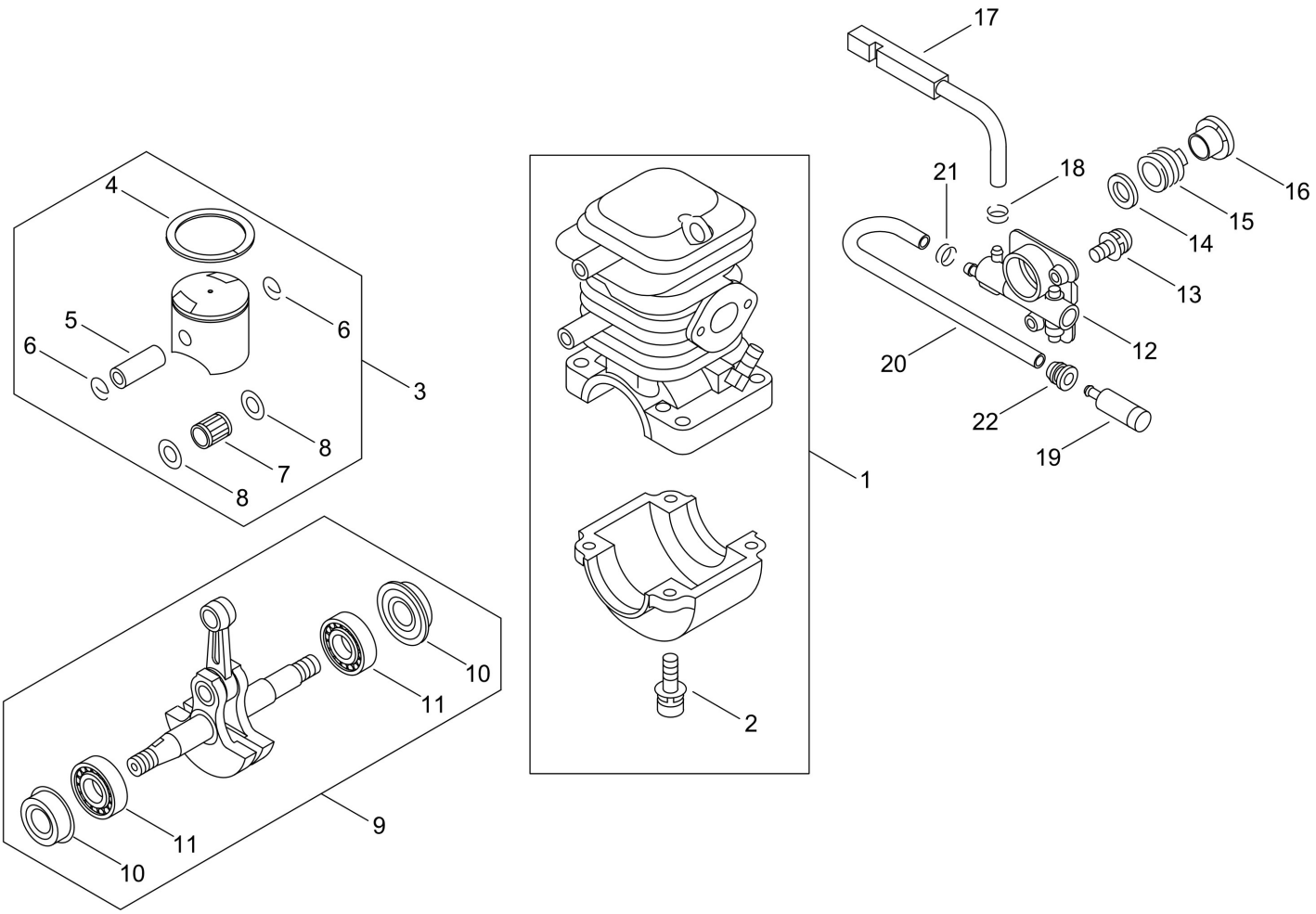

Copyright YAMABIKO EUROPE SA

Illustration 01_CYLINDER__PISTON__CRANKSHAFT

Nummer	Antal	Kode	Beskrivelse	Vedhæftet fil	Recommended Stock Item	Remark
1	1	P021017360	CRANKCASE SET	Y2009-436		
2	4	90016205022	BOLT, H.S. 5*22			
3	1	P021036520	PISTON KIT	Y2012-488		
4	1	A101000160	RING, PISTON			Medium-moving
5	1	V607000000	PIN,ENG 9			Slow-moving
6	2	10001503931	CIRCLIP, PISTON PIN			Slow-moving
7	1	10001216131	BEARING, NEEDLE			Slow-moving
8	2	10001453630	SPACER, PISTON PIN			Slow-moving
9	1	P021012141	CRANKSHAFT ASY			
10	2	V505000011	SEAL,OIL 12			Slow-moving
11	2	90088836201	BEARING, BALL			
12	1	C022000020	AUTO-OILER ASSEMBLY			Slow-moving
13	2	90023804012	SCREW			
14	1	V308000030	WASHER,CIRCULAR 11			Slow-moving
15	1	V652000030	GEAR,WORM			Medium-moving
16	1	V356000390	COLLAR,10	Y2010-445		Slow-moving
17	1	43721039932	PIPE			Slow-moving
18	1	V490001230	CLIP			Slow-moving
19	1	P100001900	STRAINER, OIL			Medium-moving
20	1	43721035431	PIPE, OIL			Slow-moving
21	1	V490001230	CLIP			Slow-moving
22	1	13211512330	grommet			Slow-moving

Copyright YAMABIKO EUROPE SA

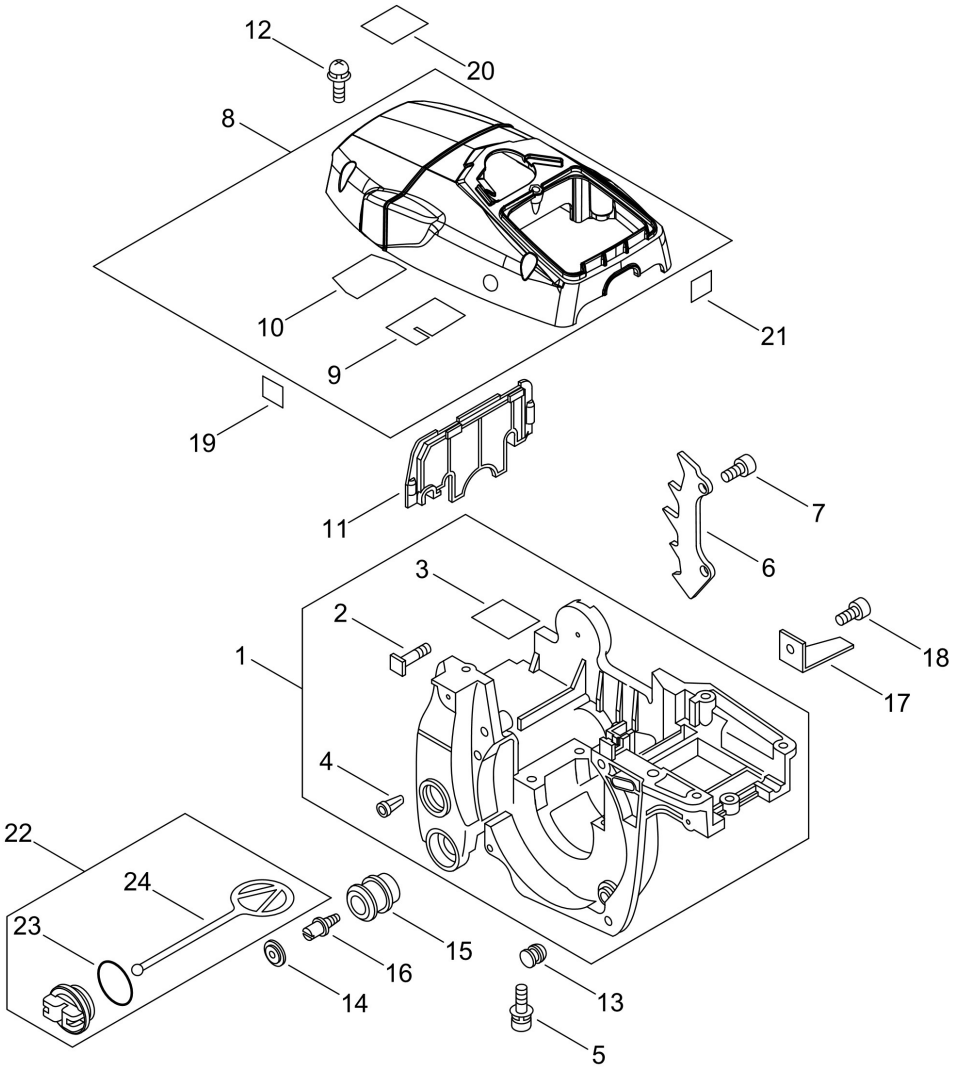

Copyright YAMABIKO EUROPE SA

Nummer	Antal	Kode	Beskrivelse	Vedhæftet fil	Recommended Stock Item	Remark
1	1	P021050250	COVER ENGINE ASY			
2	2	43301119831	STUD, GUIDE BAR			Slow-moving
3	1	V341000050	WASHER SQUARE			Slow-moving
4	1	43611413930	VALVE, CHECK			Medium-moving
5	4	90016205030	BOLT, H.S. 5*30			
6	1	C304000010	SPIKED			Slow-moving
7	2	V203002180	BOLT, 5	Y2015-567		Slow-moving
8	1	P021049190	CYLINDER COVER ASY			
9	1	V341000060	WASHER, SQUARE			Slow-moving
10	1	V341000070	WASHER, SQUARE			Slow-moving
11	1	A209000000	PLATE INSULATOR			Slow-moving
12	3	90023805020	SCREW			
13	2	V420001250	Cushion			Medium-moving
14	2	10091815130	CAP, CUSHION			Slow-moving
15	2	10091060030	CUSHION			Medium-moving
16	2	10091533930	BOLT			Slow-moving
17	1	C310000000	CATCHER CHAIN			Medium-moving
18	1	V203002180	BOLT, 5	Y2015-567		Slow-moving
19	1	89063138131	LABEL, CAUTION			Slow-moving
20	1	89034539231	LABEL			Slow-moving
21	1	X524001901	LABEL			Slow-moving
22	1	P021007630	CAP ASY, TANK			Slow-moving
23	1	90072100025	O ring CS-4200			
24	1	A365000050	CONNECTOR,CAP			Medium-moving

Copyright YAMABIKO EUROPE SA

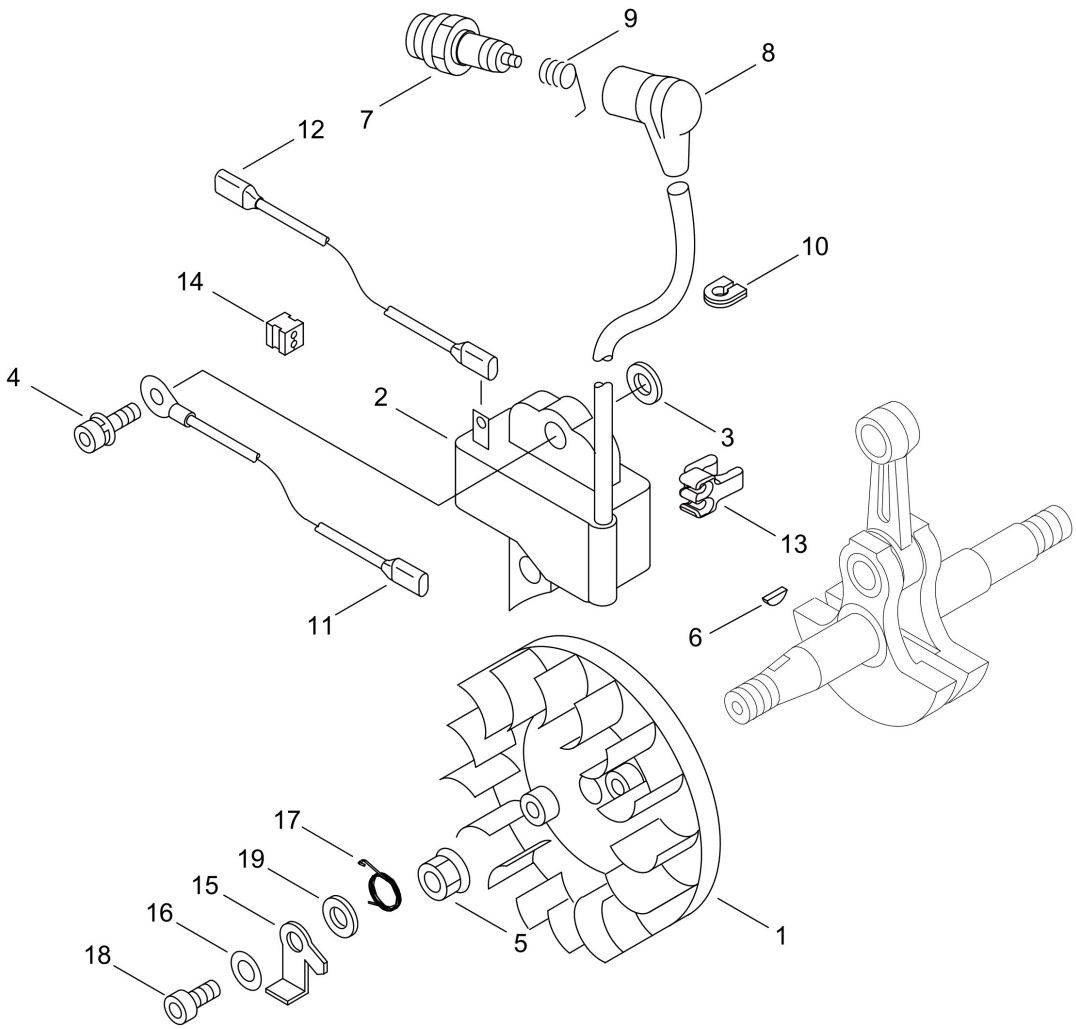

Copyright YAMABIKO EUROPE SA

Nummer	Antal	Kode	Beskrivelse	Vedhæftet fil	Recommended Stock Item	Remark
1	1	A409000272	ROTOR, MAGNETO			Slow-moving
2	1	A411000264	COIL, IGNITION			Slow-moving
3	2	15011716430	SPACER			Slow-moving
4	2	90016205020	BOLT HSH			
5	1	90051500008	NUT, FLANGE			
6	1	10014212330	KEY, WOODRUFF			Slow-moving
7	1	A425000000	SPARKPLUG			Fast-moving
8	1	A427000013	CAP,SPARK PLUG	2008-372		Slow-moving
9	1	A426000010	TERMINAL,SPARKPLUG			Slow-moving
10	1	V135000010	GROMMET, HT CORD			Slow-moving
11	1	V485000620	lead			Slow-moving
12	1	V485000680	lead			Slow-moving
13	1	V490000310	CLIP			Slow-moving
14	1	15011404920	BUSHING			Slow-moving
15	2	A514000050	PAWL			Slow-moving
16	2	90060300005	WASHER 5			
17	2	17723435430	SPRING, RETURN			Medium-moving
18	2	V203000090	BOLT,5			Slow-moving
19	2	17724704630	SPACER, RATCHET			Slow-moving

Copyright YAMABIKO EUROPE SA

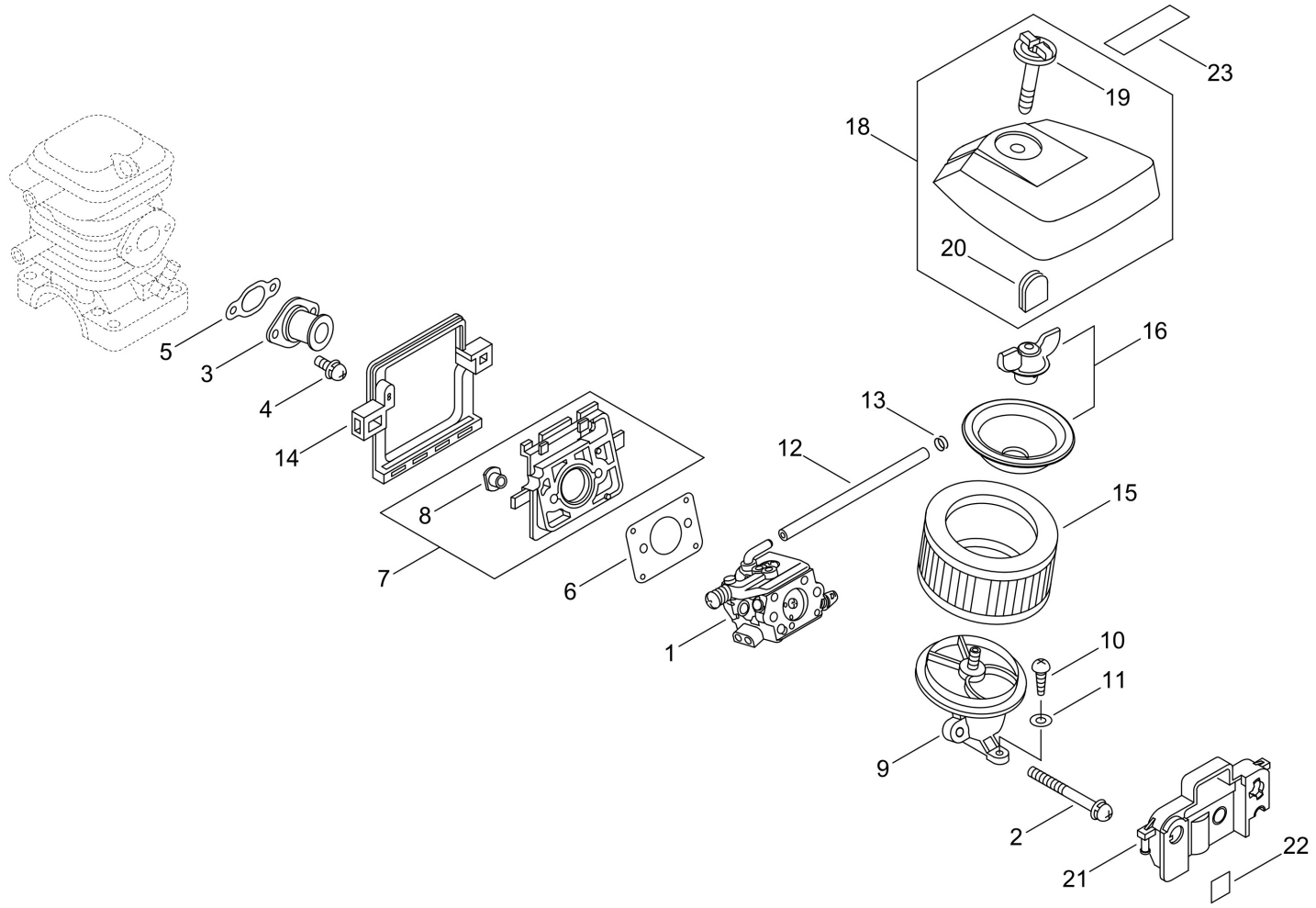

Copyright YAMABIKO EUROPE SA

Illustration 04_AIR CLEANER, CARBURETOR

Nummer	Antal	Kode	Beskrivelse	Vedhæftet fil	Recommended Stock Item	Remark
1	1	A021001900	CARBURETOR,DIAPHRAGM	Y2009-436		Medium-moving
2	2	90023805050	SCREW			
3	1	A202000060	BELLOWS, INTAKE			Slow-moving
4	2	90023805014	SCREW			
5	1	V103000290	GASKET,INTAKE			Fast-moving
6	1	V103000280	GASKET,INTAKE			Fast-moving
7	1	13000739932	INSULATOR			Slow-moving
8	2	13002033330	NUT			Slow-moving
9	1	13030139935	ADAPTER, INTAKE			Slow-moving
10	1	90025305020	SCREW 5*20			
11	1	90060000005	WASHER 5			
12	1	V471001601	PIPE			Slow-moving
13	1	V490001240	CLIP			Slow-moving
14	1	V420001420	CUSHION			Medium-moving
15	1	13030039730	CLEANER ASM., AIR			Fast-moving
16	1	P021041330	HOLDER,ELEMENT ASY			
18	1	P100005990	CLEANER COVER ASY			
19	1	A235000020	KNOB,CLEANER LID			Slow-moving
20	1	13033832430	PLUG, COVER			Medium-moving
21	1	A439000145	BRACKET,SWITCH			Slow-moving
22	1	89015739131	LABEL, SWITCH			Slow-moving
23	1	X503008450	LABEL,MODEL			Slow-moving

Copyright YAMABIKO EUROPE SA

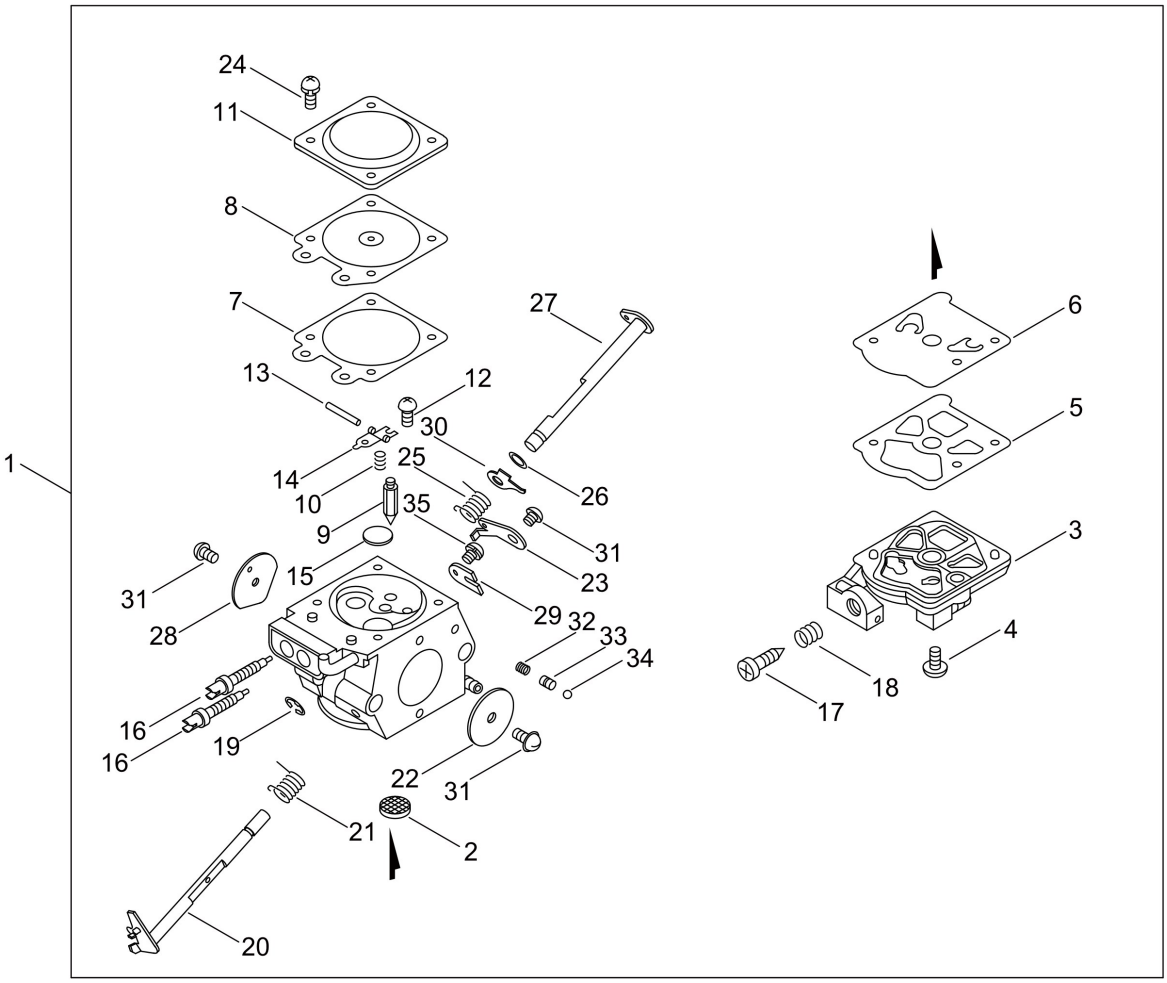

Copyright YAMABIKO EUROPE SA

Nummer	Antal	Kode	Beskrivelse	Vedhæftet fil	Recommended Stock Item	Remark
1	1	A021001900	CARBURETOR,DIAPHRAGM	Y2009-436		Medium-moving
2	1	12312610631	SCREEN, INLET			Medium-moving
3	1	P003003930	COVER, FUEL PUMP			
4	1	12311003930	SCREW, PUMP COVER			Slow-moving
5	1	12312515030	GASKET, FUEL PUMP			Fast-moving
6	1	12311215030	DIAPHRAGM, FUEL PUMP			Fast-moving
7	1	12314003930	GASKET, M. DIAPHRAGM			Fast-moving
8	1	P003001850	DIAPHRAGM, METERING			Fast-moving
9	1	12313719830	VALVE, INLET NEEDLE			Slow-moving
10	1	12312239330	SPRING, METER. LEVER			
11	1	12314203930	COVER, M. DIAPHRAGM			Slow-moving
12	1	12313903930	SCREW, M. LEVER PIN			Slow-moving
13	1	12313803930	PIN, METERING LEVER			Slow-moving
14	1	12312303930	LEVER, METERING			Slow-moving
15	1	12314610631	PLUG, WELCH			Slow-moving
16	2	P003002270	NEEDLE			Slow-moving
17	1	12313404260	SCREW, IDLE ADJUST			Slow-moving
18	1	12313304260	SPRING, IDLE ADJUST			Slow-moving
19	1	12312715030	RING			Slow-moving
20	1	P003003960	SHAFT ASY,THROTTLE			
21	1	12311337530	SPRING, THROTTLE RTN			Medium-moving
22	1	12311610530	VALVE, THROTTLE			Slow-moving
23	1	P003001780	LEVER, THROTTLE			
24	4	12313002960	SCREW			Slow-moving
25	1	P003002260	SPRING			Slow-moving
26	1	12314926030	WASHER			Slow-moving
27	1	P003000150	CHOKE, SHAFT			
28	1	P003001790	VALVE, CHOKE			
29	1	12312703930	CLIP, THROTTLE SHAFT			Slow-moving
30	1	P003001510	LEVER-FAST IDLE			Slow-moving
31	3	12311438830	SCREW			Slow-moving
32	1	12318609660	SPRING, START VALVE			Slow-moving
33	1	12318509660	PISTON ASSY			Slow-moving
34	1	12313609660	BALL			Slow-moving
35	1	P003005120	SCREW			Slow-moving

Copyright YAMABIKO EUROPE SA

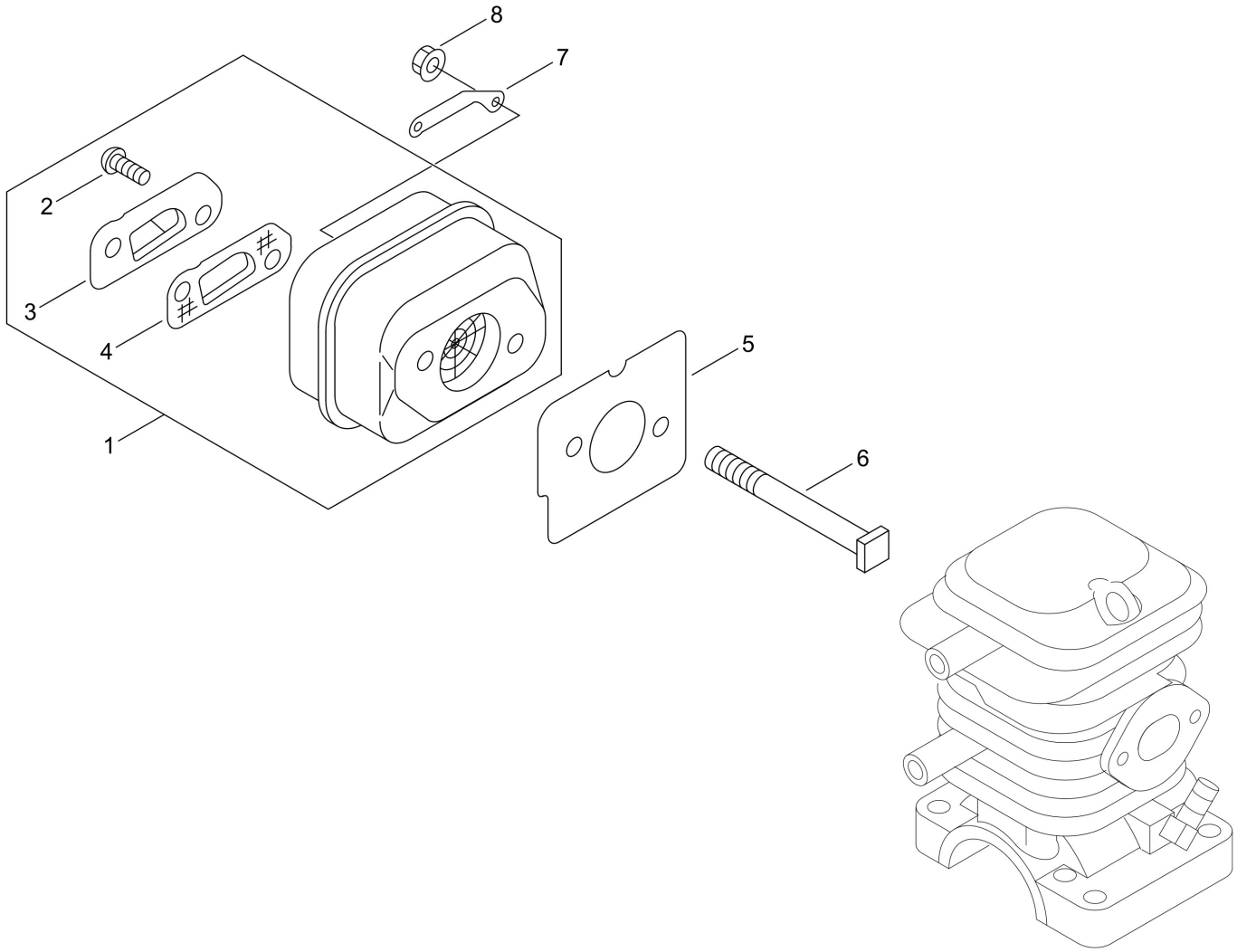

Copyright YAMABIKO EUROPE SA

Nummer	Antal	Kode	Beskrivelse	Vedhæftet fil	Recommended Stock Item	Remark
1	1	P100007250	MUFFLER ASY			
2	2	90022004008	Screw 4*8			
3	1	A313000811	GUIDE, EXHAUST			Slow-moving
4	1	A310000060	SCREEN, ARRESTOR			Medium-moving
5	1	V104000732	GASKET,EXHAUST			Fast-moving
6	2	V203000220	screw, 5			Slow-moving
7	1	V150001820	PLATE, EYE			Slow-moving
8	2	90051600005	NUT, FRANGE 5			

Copyright YAMABIKO EUROPE SA

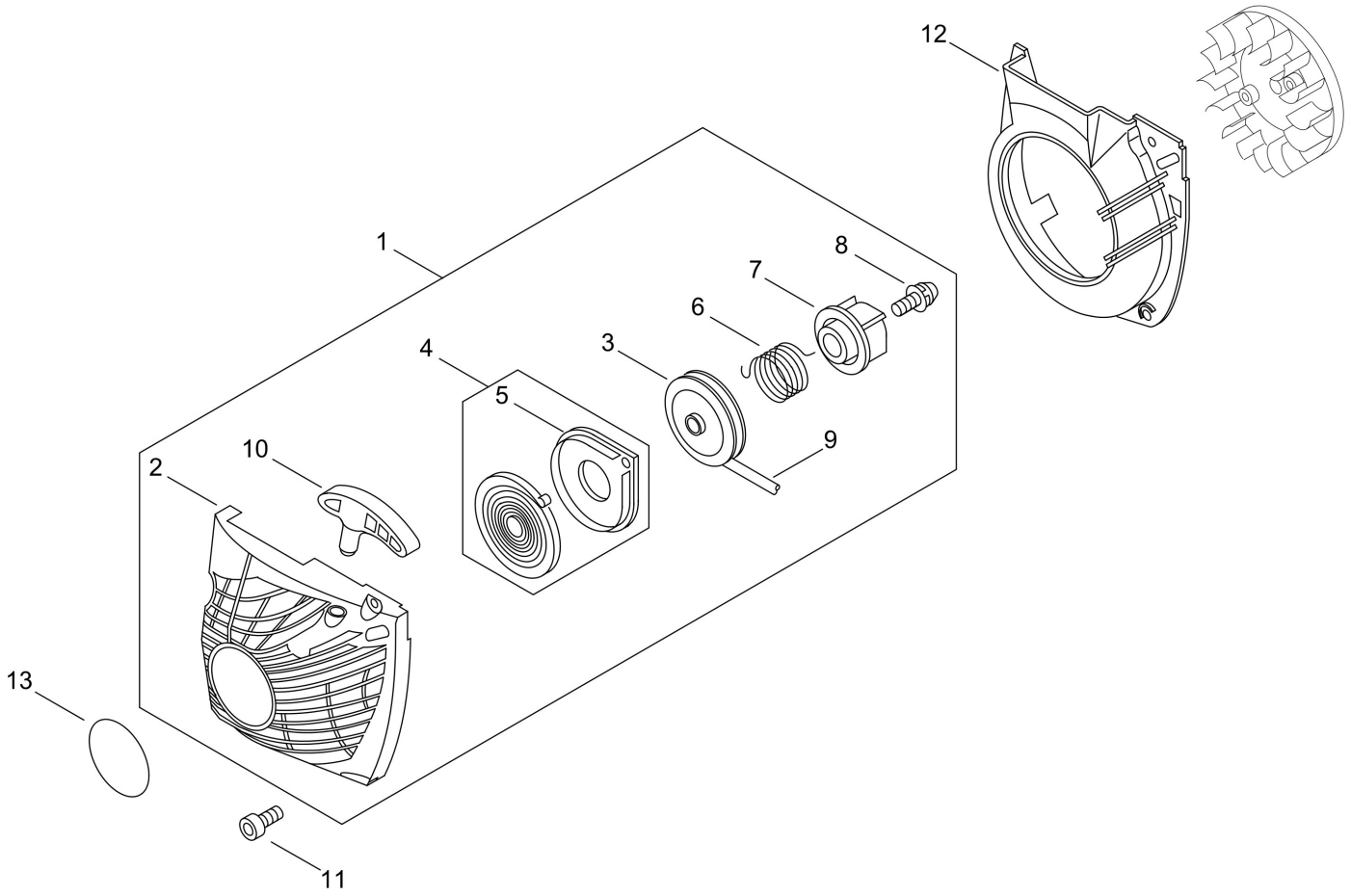

Copyright YAMABIKO EUROPE SA

Illustration 07_RECOIL_STARTER

Nummer	Antal	Kode	Beskrivelse	Vedhæftet fil	Recommended Stock Item	Remark
1	1	A051000982	STARTER,RECOIL ASY	Y2011-481		Medium-moving
2	1	P022038540	STARTER CASE			
3	1	A506000460	REEL,ROPE	Y2011-481		Slow-moving
4	1	P022010440	SPRING KIT, REWIND			Medium-moving
5	1	P022033280	SPRING CASE			Slow-moving
6	1	V452001320	SPRING,TORSION	Y2011-481		Medium-moving
7	1	A507000110	CATCHER,PAWL	Y2011-481		Slow-moving
8	1	17723661830	SCREW			
9	1	P022008440	ROPE, STARTER			Medium-moving
10	1	P022005891	GRIP, STARTER			Slow-moving
11	4	V203002190	BOLT, 5	Y2015-567		Slow-moving
12	1	A172002360	COVER,FAN			Slow-moving
13	1	X502000780	LABEL,ECHO			Slow-moving

Copyright YAMABIKO EUROPE SA

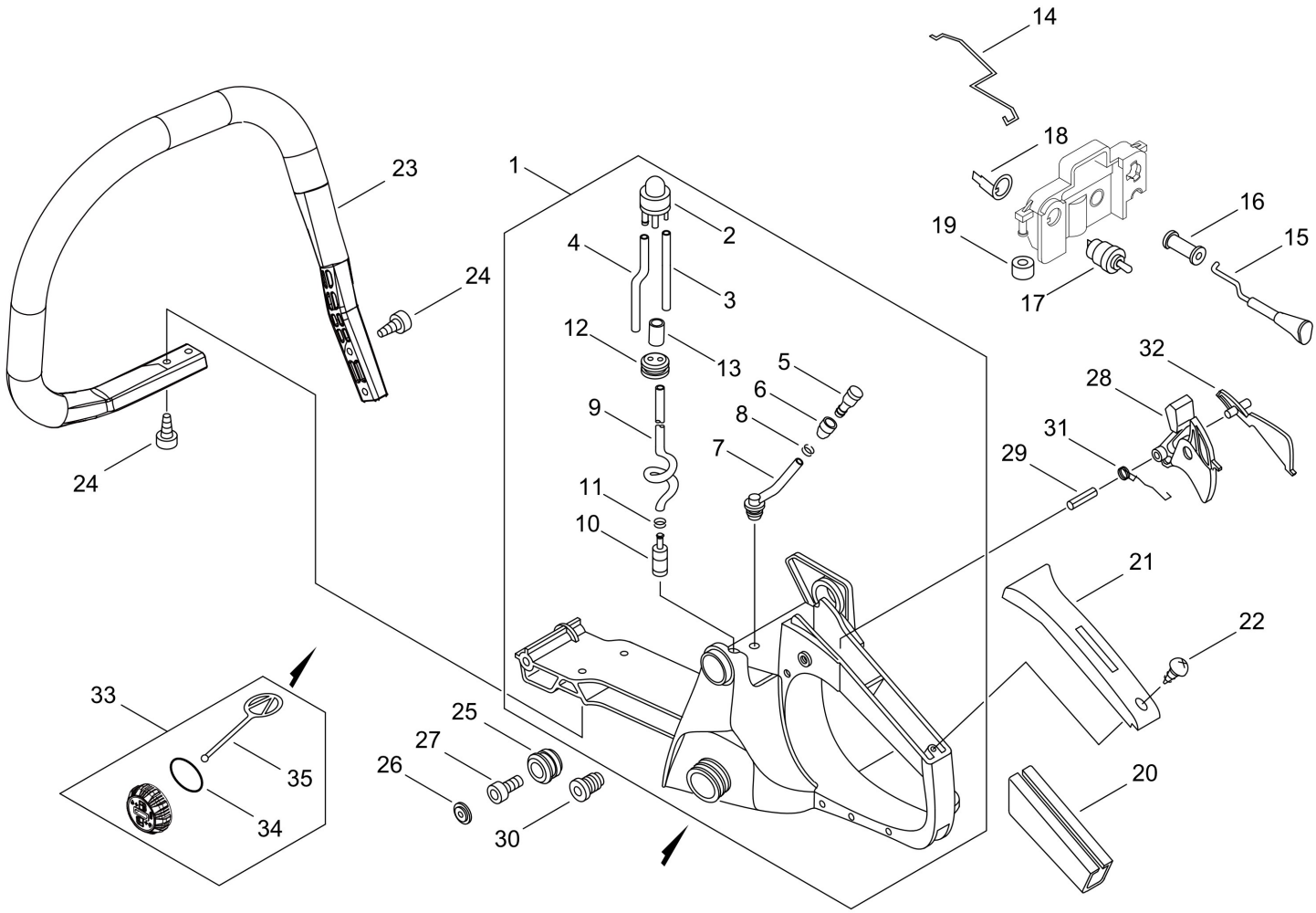

Copyright YAMABIKO EUROPE SA

Illustration 08_HANDLE

Nummer	Antal	Kode	Beskrivelse	Vedhæftet fil	Recommended Stock Item	Remark
1	1	P100006032	HANDLE ASY, REAR			
2	1	12318139130	PUMP, FUEL			Fast-moving
3	1	V471001281	PIPE			Slow-moving
4	1	V471001471	PIPE			Slow-moving
5	1	13130056431	VENT ASSEMBLY, FUEL			Medium-moving
6	1	13132840630	COVER, VENT			Slow-moving
7	1	13201239932	PIPE			Slow-moving
8	1	V490001230	CLIP			Slow-moving
9	1	13201000760	PIPE 3* 5*250			Slow-moving
10	1	A369000420	STRAINER, FUEL	Y2015-564		Fast-moving
11	1	V490001240	CLIP			Slow-moving
12	1	13211544331	GROMMET, FUEL			Slow-moving
13	1	V475003970	TUBE			Slow-moving
14	1	C454000100	Rod Throttle			Slow-moving
15	1	A241000140	ROD CHOKE			Slow-moving
16	1	17881014535	GROMMET			Slow-moving
17	1	16340038330	SWITCH IGNITION			Slow-moving
18	1	V486000021	PRIMER			Slow-moving
19	2	35113439930	SPACER			Medium-moving
20	1	35111119831	GRIP, HANDLE			Slow-moving
21	1	35115535431	COVER, HANDLE (BL)			Slow-moving
22	1	90025304014	SCREW 4*14			
23	1	C400001430	HANDLE,FRONT	Y2014-549		Slow-moving
24	4	V203002190	BOLT, 5	Y2015-567		Slow-moving
25	2	V400000051	Cushion			Medium-moving
26	2	10091815130	CAP, CUSHION			Slow-moving
27	2	V202000700	BOLT,4	Y2014-549		Slow-moving
28	1	C450000213	CONTROL, THROTTLE			Slow-moving
29	1	90034540030	TENSIONER, CHAIN			
30	1	V162000040	PLUG			Slow-moving
31	1	V452000260	SPRING,TORSION			Medium-moving
32	1	C460000072	LOCKOUT, THROTTLE			Slow-moving
33	1	P021036960	FUEL CAP ASY			
34	1	V581000610	O-RING			Fast-moving
35	1	A365000050	CONNECTOR,CAP			Medium-moving

Copyright YAMABIKO EUROPE SA

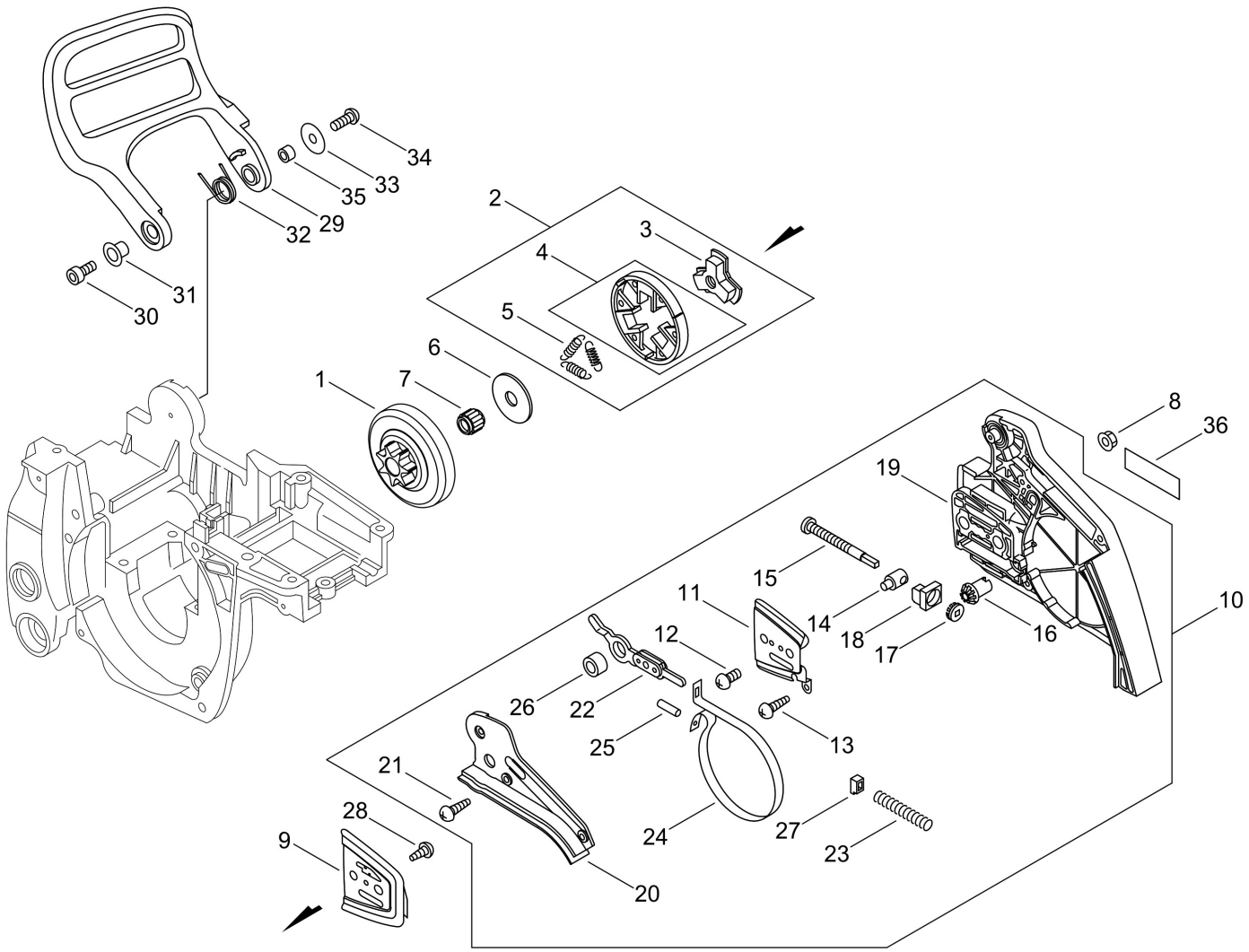

Copyright YAMABIKO EUROPE SA

Nummer	Antal	Kode	Beskrivelse	Vedhæftet fil	Recommended Stock Item	Remark
1	1	A556000481	DRUM, CLUTCH			Medium-moving
2	1	A056000181	CLUTCH ASY			Medium-moving
3	1	A552000070	HUB, CLUTCH	2008-371		Medium-moving
4	1	P021007051	CLUTCH SHOE SET			Medium-moving
5	3	V451000500	SPRING,TENSION	2008-371		Medium-moving
6	1	17501939430	PLATE, CLUTCH	2008-371		Slow-moving
7	1	V555000170	BEARING,NEEDLE 10			Medium-moving
8	2	V265000200	NUT,8			Slow-moving
9	1	43301239930	PLATE, GUIDE			Slow-moving
10	1	P021048930	GUARD, SPROCKET ASY			
11	1	C305000012	PLATE, GUIDE			Slow-moving
12	1	9132503005	SCREW			Slow-moving
13	1	V202000060	Bolt			Slow-moving
14	1	C309000030	TENSIONER,CHAIN			Slow-moving
15	1	V203000110	BOLT,5			Slow-moving
16	1	V651000001	GEAR,BEVEL			Slow-moving
17	1	V651000011	GEAR,BEVEL			Slow-moving
18	1	V355000800	COLLAR,8	Y2015-563		Slow-moving
19	1	C300000313	GUARD, SPROCKET			Slow-moving
20	1	C345000211	Cover, Brake			Slow-moving
21	3	V202000060	Bolt			Slow-moving
22	1	C334000090	CONNECTOR, BRAKE			Slow-moving
23	1	V450000070	SPRING,COMPRESSION			Medium-moving
24	1	C328000080	BAND, BRAKE			Slow-moving
25	1	9305030098	ROLLER			
26	1	43311635430	SPACER 8*12*9			Slow-moving
27	1	V376000450	SPACER			Slow-moving
28	1	V202000060	Bolt			Slow-moving
29	1	C320000113	LEVER, BRAKE			Slow-moving
30	1	V203002180	BOLT, 5	Y2015-567		Slow-moving
31	1	V356000300	COLLAR, 10			Slow-moving
32	1	V452000250	SPRING,TORSION			Medium-moving
33	1	17721403930	WASHER			Slow-moving
34	1	V202000070	Screw CS-370ES			Slow-moving
35	1	43311635430	SPACER 8*12*9			Slow-moving
36	1	X502000340	LABEL,ECHO			Slow-moving

Copyright YAMABIKO EUROPE SA

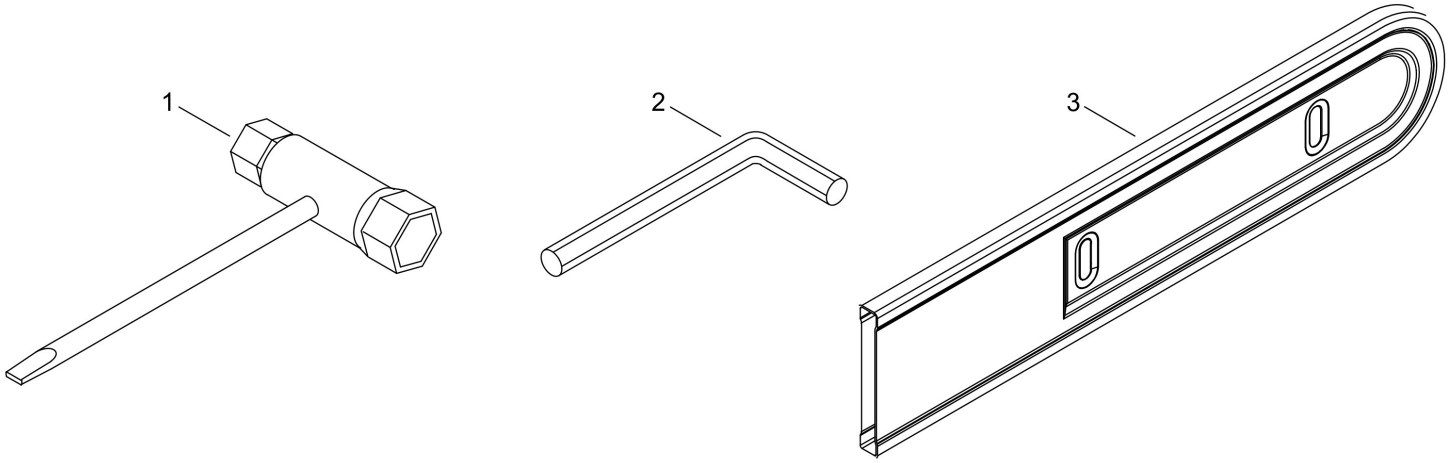

Copyright YAMABIKO EUROPE SA

Nummer	Antal	Kode	Beskrivelse	Vedhæftet fil	Recommended Stock Item	Remark
1	1	X602000080	TOOL,WRENCH			Slow-moving
2	1	X605000100	TOOL,L WRENCH			Slow-moving
3	1	X490000570	SCABBARD,CHAIN			Slow-moving

Copyright YAMABIKO EUROPE SA

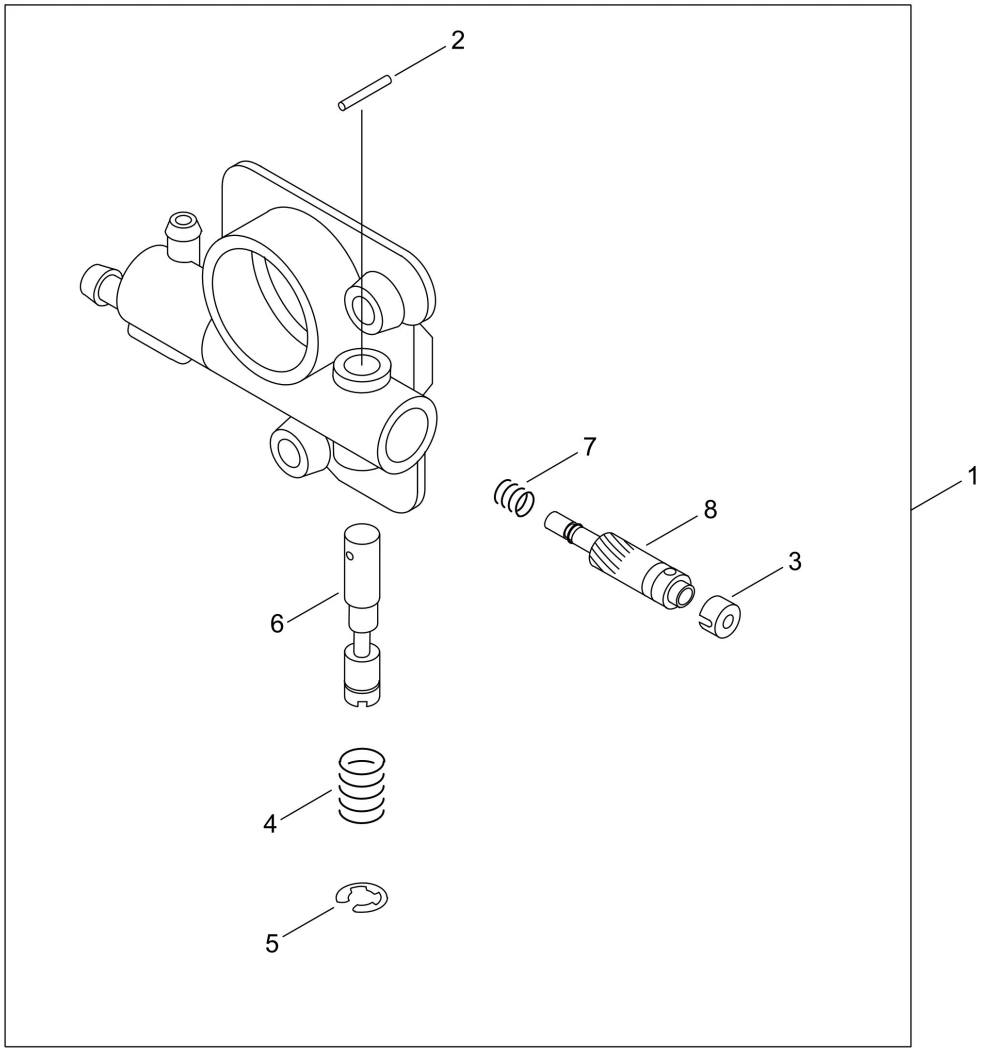

Copyright YAMABIKO EUROPE SA

Illustration 11_OILER

Nummer	Antal	Kode	Beskrivelse	Vedhæftet fil	Recommended Stock Item	Remark
1	1	C022000020	AUTO-OILER ASSEMBLY			Slow-moving
2	1	P003002180	PIN, SPRING			Slow-moving
3	1	43706238330	CAP, OIL PUMP			Slow-moving
4	1	43701537330	SPRING			Slow-moving
5	1	12312715030	RING			Slow-moving
6	1	P003001370	NEEDLE-ADJ			Slow-moving
7	1	43701938330	SPRING			Slow-moving
8	1	43702437330	PLUNGER			Slow-moving

Copyright YAMABIKO EUROPE SA

Pitch ピッチ (inch) (mm)	Gauge ゲージ (inch) (mm)	Length 長 さ (cm)	Guide Bar ガイドバー		Saw Chain ソーチエン		Hard Nose ハード ノーズ	Sprocket Nose スプロケット ノーズ
			Key №	Type 形 式	Key №	Type 形 式		
.325 8.26	0.058 1.47	38	A1	C38S21-64AA-ET	A2	21BPX-64E		●
.325 8.26	0.050 1.27	38	B1	Y38S20-64ML- ED	B2	95TXL-64E		●
.325 8.26	0.050 1.27	45	C1	Y45S20-72ML- ED	C2	95TXL-72E		●
.325 8.26	0.058 1.47	45	D1	C45S21-72AA- ET	D2	21BPX-72E		●

Copyright YAMABIKO EUROPE SA

Illustration 12_GUIDE_BAR__CHAIN

Nummer	Antal	Kode	Beskrivelse	Vedhæftet fil	Recommended Stock Item	Remark
A1	1	43052137334	BAR, GUIDE			Fast-moving
A2	1	43172130231	CHAIN, SAW			Fast-moving
B1	1	X123000670	BAR,GUIDE 38			Fast-moving
B2	1	X243000020	CHAIN,SAW			Fast-moving
C1	1	X125000440	BAR,GUIDE 45			Fast-moving
C2	1	X245000060	CHAIN,SAW			Fast-moving
D1	1	43052737334	BAR, GUIDE			Fast-moving
D2	1	43171730231	CHAIN, SAW 21BPX-72E			Fast-moving

Copyright YAMABIKO EUROPE SA