CS-420ES (37017621-)

Dokumenter

air filter, exhaust

Carburettor WT-950

clutch, chain brake

cutting set

Engine, housing, oil tank

handles, petrol tank

oil pump, tool

special tools

starter, ignition

Copyright YAMABIKO EUROPE SA

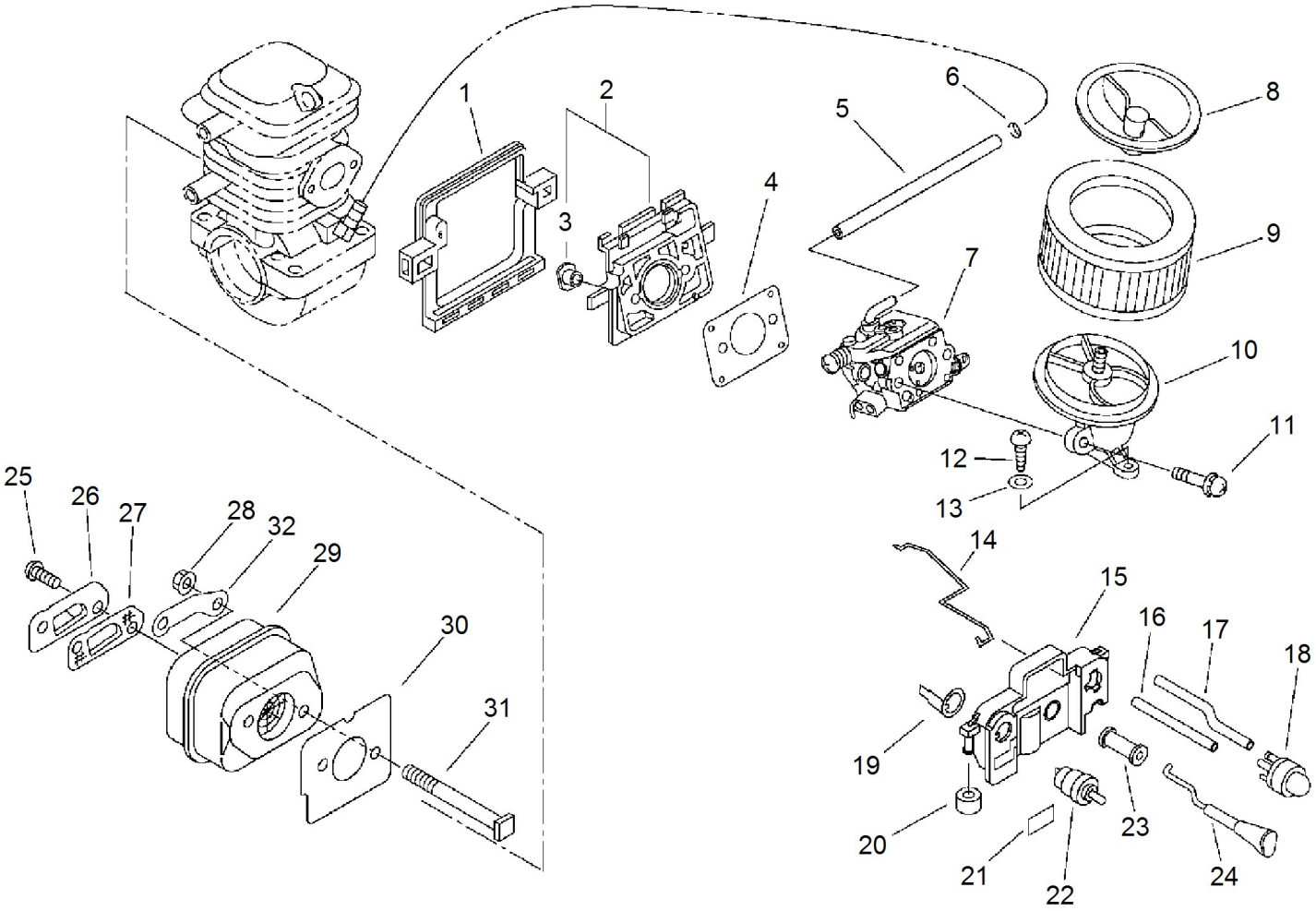

Copyright YAMABIKO EUROPE SA

Illustration air filter, exhaust

Nummer	Antal	Kode	Beskrivelse	Vedhæftet fil	Recommended Stock Item	Remark
1	1	V420001420	CUSHION			Medium-moving
2	1	13000739932	INSULATOR			Slow-moving
3	2	13002033330	NUT			Slow-moving
4	1	V103000280	GASKET,INTAKE			Fast-moving
5	1	V471001600	PIPE			Slow-moving
6	1	13201309820	CLIP			Slow-moving
7	1	A021001790	CARBURETOR, DIAPHRAGM	2009-401		Medium-moving
8	1	13040538332	BRACKET, AIR CLEANER			Slow-moving
9	1	13030039730	CLEANER ASM., AIR			Fast-moving
10	1	13030139935	ADAPTER, INTAKE			Slow-moving
11	2	90023805050	SCREW			
12	1	90025305020	SCREW 5*20			
13	1	90060000005	WASHER 5			
14	1	C454000100	Rod Throttle			Slow-moving
15	1	A439000145	BRACKET,SWITCH			Slow-moving
16	1	V471001280	PIPE			Slow-moving
17	1	V471001470	PIPE			Slow-moving
18	1	12318139130	PUMP, FUEL			Fast-moving
19	1	V486000021	PRIMER			Slow-moving
20	2	35113439930	SPACER			Medium-moving
21	1	89015739130	LABEL, SWITCH			Slow-moving
22	1	16340038330	SWITCH IGNITION			Slow-moving
23	1	17881014534	GROMMET			Slow-moving
24	1	A241000140	ROD CHOKE			Slow-moving
25	2	90022004008	Screw 4*8			
26	1	A313000810	GUIDE, EXHAUST			Slow-moving
27	1	A310000060	SCREEN, ARRESTOR			Medium-moving
28	2	90051600005	NUT, FRANGE 5			
29	1	A300000680	MUFFLER, EXHAUST			Slow-moving
30	1	V104000731	GASKET,EXHAUST			Fast-moving
31	2	V203000220	screw, 5			Slow-moving
32	1	V150001820	PLATE, EYE			Slow-moving

Copyright YAMABIKO EUROPE SA

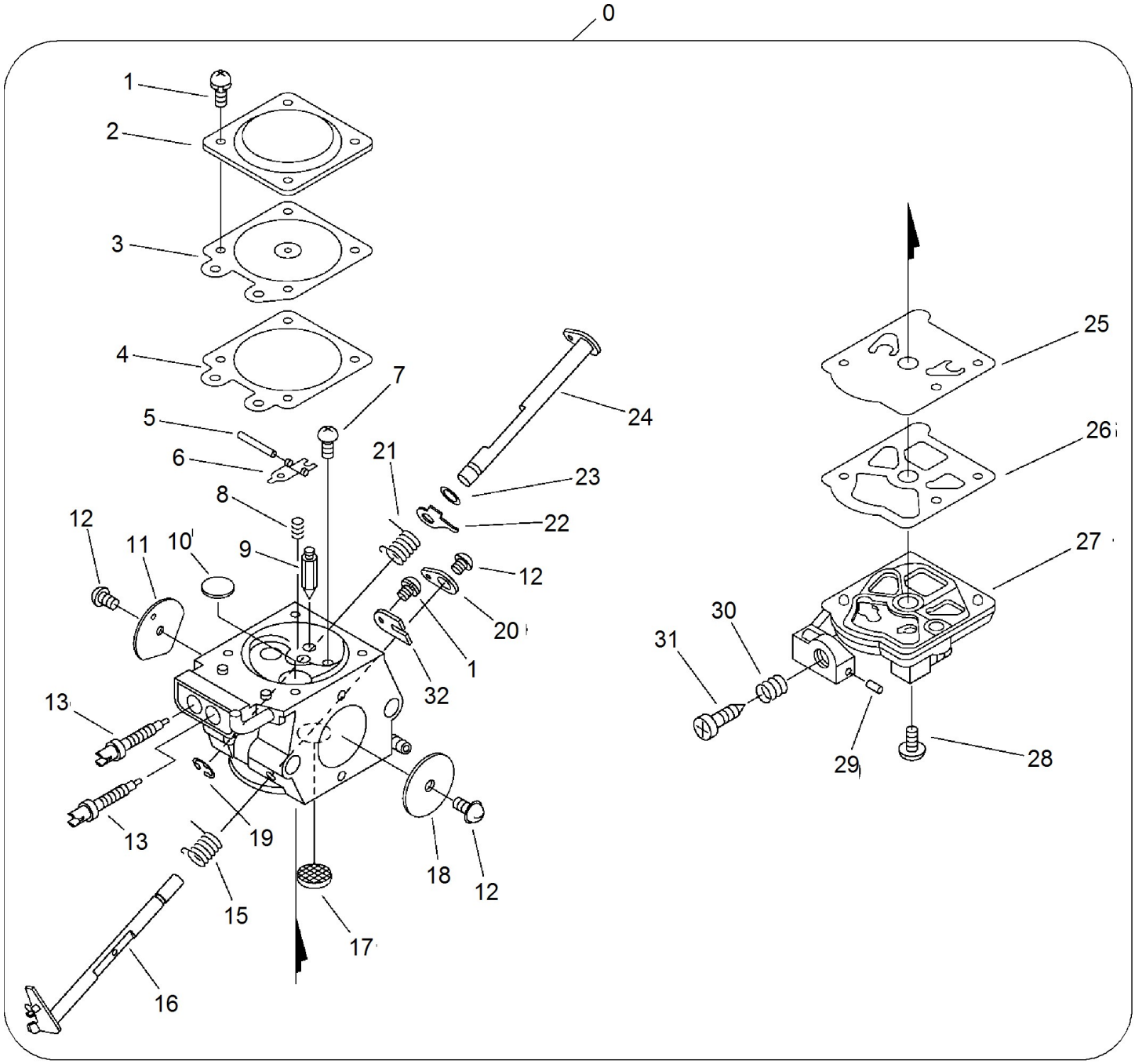

Copyright YAMABIKO EUROPE SA

Illustration Carburettor WT-950

Nummer	Antal	Kode	Beskrivelse	Vedhæftet fil	Recommended Stock Item	Remark
0	1	A021001790	CARBURETOR, DIAPHRAGM	2009-401		Medium-moving
1	1	12313002960	SCREW			Slow-moving
2	1	12314203930	COVER, M. DIAPHRAGM			Slow-moving
3	1	P003001850	DIAPHRAGM, METERING			Fast-moving
4	1	12314003930	GASKET, M. DIAPHRAGM			Fast-moving
5	1	12313803930	PIN, METERING LEVER			Slow-moving
6	1	12312303930	LEVER, METERING			Slow-moving
7	1	12313903930	SCREW, M. LEVER PIN			Slow-moving
8	1	12312239330	SPRING, METER. LEVER			
9	1	12313719830	VALVE, INLET NEEDLE			Slow-moving
10	1	12314610631	PLUG, WELCH			Slow-moving
11	1	P003001790	VALVE, CHOKE			
12	3	12311438830	SCREW			Slow-moving
13	2	P003002270	NEEDLE			Slow-moving
15	1	12311337530	SPRING, THROTTLE RTN			Medium-moving
16	1	P003001810	SHAFT ASY, THROTTLE			
17	1	12312610631	SCREEN, INLET			Medium-moving
18	1	12311610530	VALVE, THROTTLE			Slow-moving
19	1	12312715030	RING			Slow-moving
20	1	P003001780	LEVER, THROTTLE			
21	1	P003000140	SPRING			
22	1	P003001510	LEVER-FAST IDLE			Slow-moving
23	1	12314926030	WASHER			Slow-moving
24	5	P003000150	CHOKE, SHAFT			
25	1	12311215030	DIAPHRAGM, FUEL PUMP			Fast-moving
26	1	12312515030	GASKET, FUEL PUMP			Fast-moving
27	1	12312438330	COVER FUEL PUMP			
28	1	12311003930	SCREW, PUMP COVER			Slow-moving
29	1	12317815030	Plug, Friction			
30	1	12313304260	SPRING, IDLE ADJUST			Slow-moving
31	1	12313404260	SCREW, IDLE ADJUST			Slow-moving
32	1	12312703930	CLIP, THROTTLE SHAFT			Slow-moving

Copyright YAMABIKO EUROPE SA

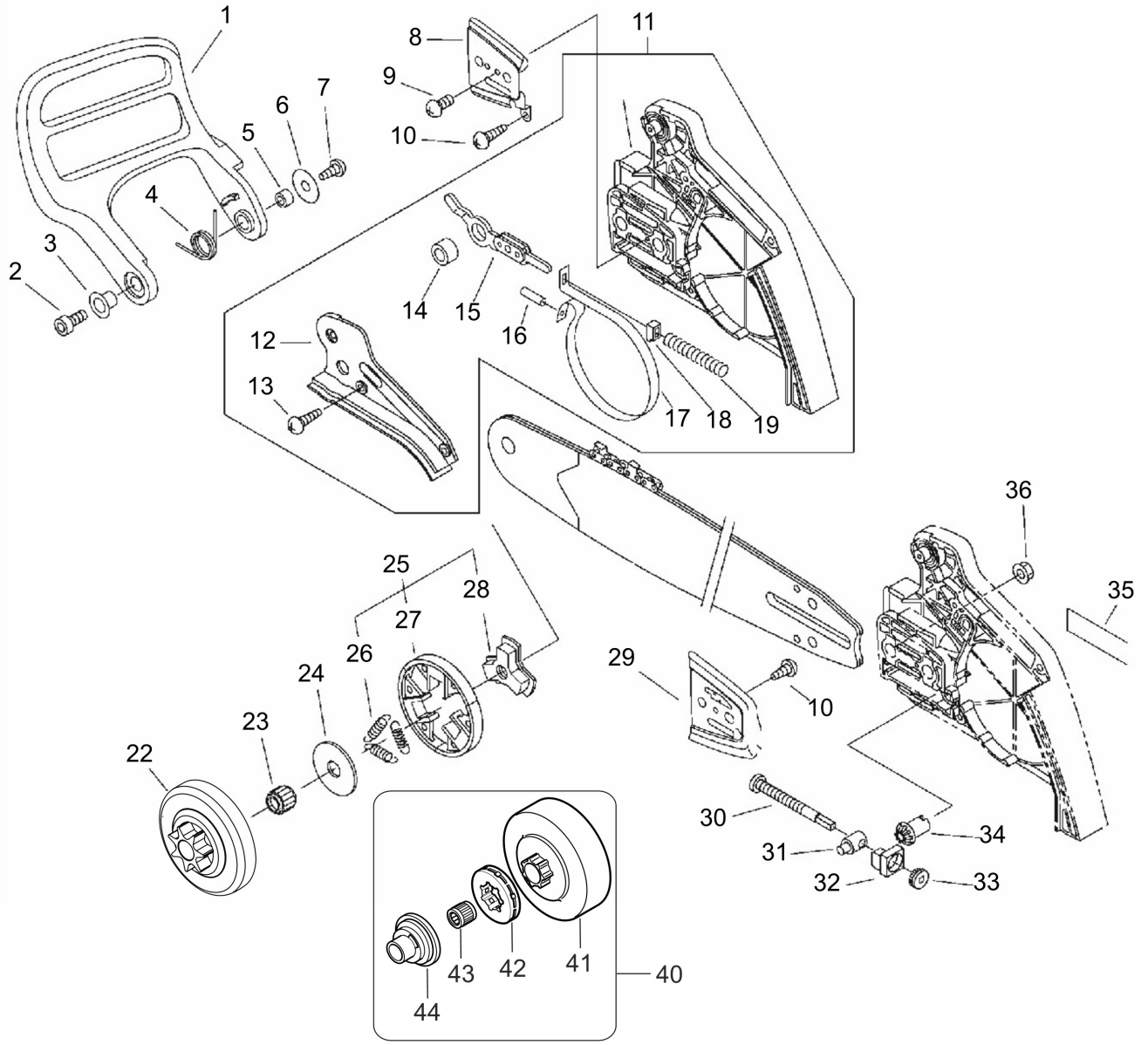

Copyright YAMABIKO EUROPE SA

Illustration clutch, chain brake

Nummer	Antal	Kode	Beskrivelse	Vedhæftet fil	Recommended Stock Item	Remark
1	1	C320000112	LEVER, BRAKE			Slow-moving
2	1	9114505016	BOLT HS TAPPING	Y2014-549		
3	1	V356000300	COLLAR, 10			Slow-moving
4	1	V452000250	SPRING,TORSION			Medium-moving
5	1	43311635430	SPACER 8*12*9			Slow-moving
6	1	17721403930	WASHER			Slow-moving
7	1	V202000070	Screw CS-370ES			Slow-moving
8	1	C305000012	PLATE, GUIDE			Slow-moving
8	1	C305000011	PLATE, GUIDE			Slow-moving
9	1	9132503005	SCREW			Slow-moving
10	2	V202000060	Bolt			Slow-moving
11	1	P021017220	BRAKE ASY, CHAIN			
12	1	C345000211	Cover, Brake			Slow-moving
13	3	V202000060	Bolt			Slow-moving
14	1	43311635430	SPACER 8*12*9			Slow-moving
15	1	C334000090	CONNECTOR, BRAKE			Slow-moving
16	1	9305030098	ROLLER			
17	1	C328000080	BAND, BRAKE			Slow-moving
18	1	V376000450	SPACER			Slow-moving
19	1	V450000070	SPRING,COMPRESSION			Medium-moving
22	1	A556000480	DRUM, CLUTCH	Y2010-445		Medium-moving
23	1	17501200831	BEARING, NEEDLE	Y2010-445		Medium-moving
24	1	17501939430	PLATE, CLUTCH	2008-371		Slow-moving
25	1	A056000180	CLUTCH	2008-371		Medium-moving
26	3	V451000500	SPRING,TENSION	2008-371		Medium-moving
27	1	P021007050	CLUTCH SHOE SET	2008-371		Medium-moving
28	1	A552000070	HUB, CLUTCH	2008-371		Medium-moving
29	1	43301239930	PLATE, GUIDE			Slow-moving
30	1	V203000110	BOLT,5			Slow-moving
31	1	C309000030	TENSIONER,CHAIN			Slow-moving
32	1	V355000270	COLLAR,8	Y2015-563		Slow-moving
33	1	V651000011	GEAR,BEVEL			Slow-moving
34	1	V651000001	GEAR,BEVEL			Slow-moving
35	1	X502000340	LABEL,ECHO			Slow-moving
36	2	43301912330	NUT, FLANGE 8			Slow-moving
40	1	P021035570	Kit, conversion to ring sprocket .325"	Y2010-445		
41	1	A556001270	Clutch drum for track sprocket	Y2010-445		Medium-moving
42	1	17511412530	RIM, SPROCKET 31569	Y2010-445		Medium-moving
43	1	10001212331	BEARING, NEEDLE	Y2010-445		Medium-moving
44	1	V356000352	Oil pump drive with .325" ring sprocket			Slow-moving

Copyright YAMABIKO EUROPE SA

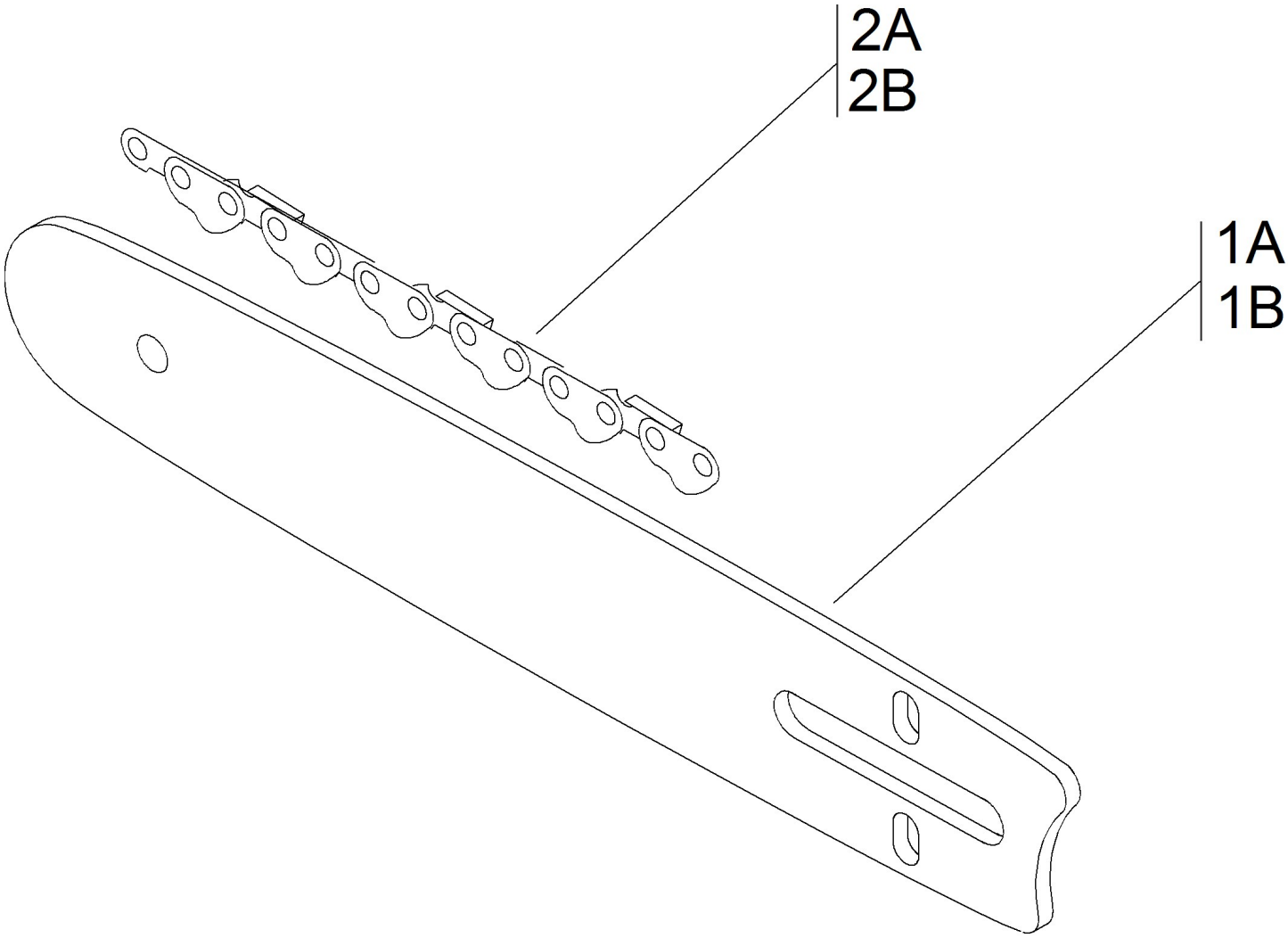

Copyright YAMABIKO EUROPE SA

Illustration cutting set

Nummer	Antal	Kode	Beskrivelse	Vedhæftet fil	Recommended Stock Item	Remark
1A	1	S38RD58325	Bar for Chain Saw 430521-30131			
1B	1	S33RD58325	Chain bar 33 cm / 56 drive links (1.5) 325"			
2A	1	KE38153264	SAW CHAIN 15" 21BP-64X			
2B	1	KE33153256	SAW CHAIN 13" 21BP-56X			

Copyright YAMABIKO EUROPE SA

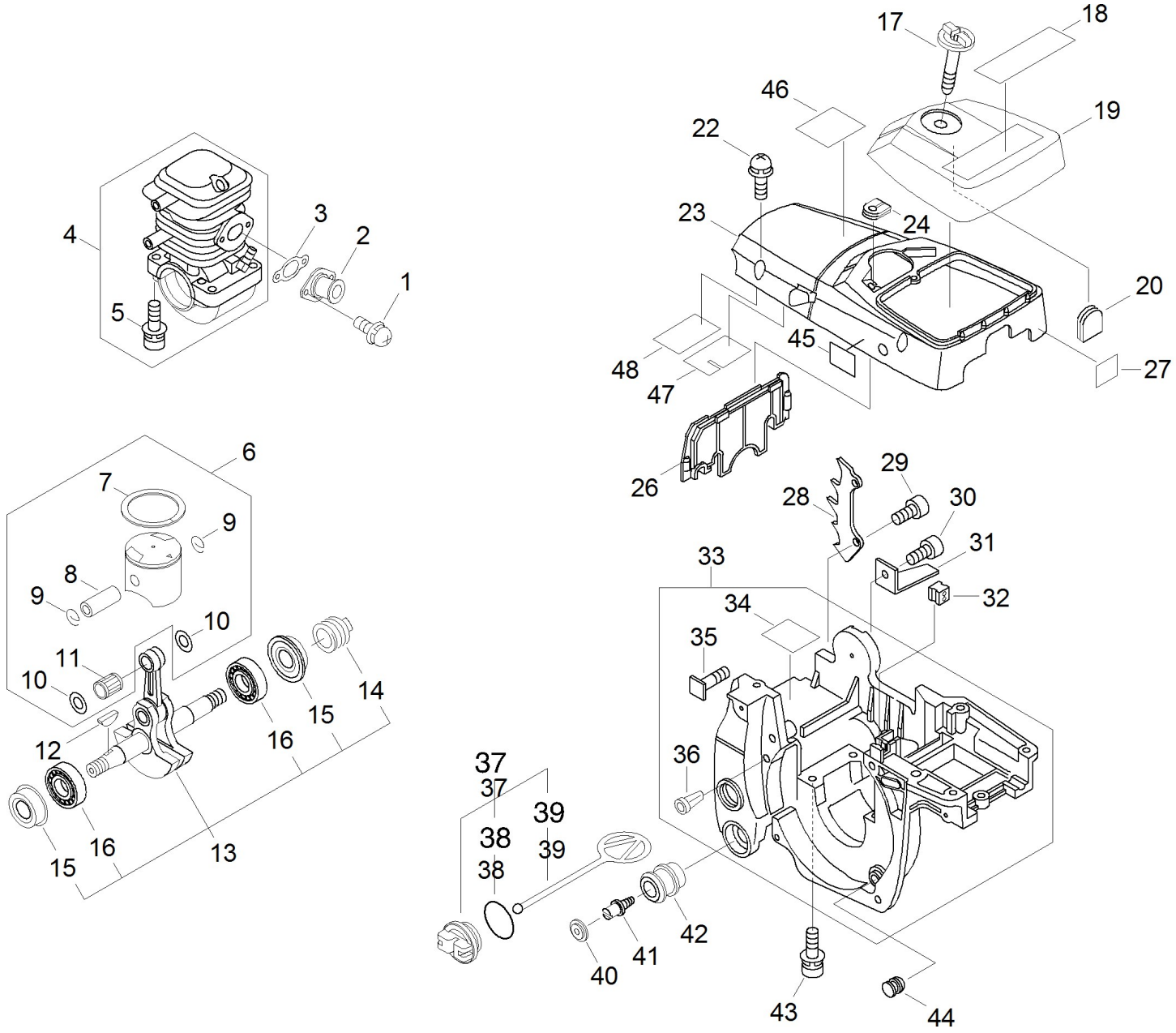

Copyright YAMABIKO EUROPE SA

Nummer	Antal	Kode	Beskrivelse	Vedhæftet fil	Recommended Stock Item	Remark
1	2	90023805014	SCREW			
2	1	A202000060	BELLOWS, INTAKE			Slow-moving
3	1	V103000290	GASKET,INTAKE			Fast-moving
4	1	P021010574	CRANKCASE SET	Y2009-436		
5	4	90016205022	BOLT, H.S. 5*22			
6	1	P021010582	PISTON KIT	2009-426		
7	1	A101000160	RING, PISTON			Medium-moving
8	1	V607000000	PIN,ENG 9			Slow-moving
9	2	10001503931	CIRCLIP, PISTON PIN			Slow-moving
10	2	10001453630	SPACER, PISTON PIN			Slow-moving
11	1	10001216131	BEARING, NEEDLE			Slow-moving
12	1	10014212330	KEY, WOODRUFF			Slow-moving
13	1	P021013620	CRANKSHAFT ASY			
14	1	V652000030	GEAR,WORM			Medium-moving
15	2	V505000011	SEAL,OIL 12			Slow-moving
15	2	V505000010	SEAL,OIL 12			Slow-moving
16	2	90088836201	BEARING, BALL			
17	1	A235000020	KNOB,CLEANER LID			Slow-moving
18	1	X503008450	LABEL,MODEL			Slow-moving
19	1	A232000023	LID, CLEANER			Slow-moving
20	1	13033832430	PLUG, COVER			Medium-moving
22	3	90023805020	SCREW			
23	1	A160000764	Cover, cylinder, CS-370/CS-420ES			Slow-moving
24	1	V135000010	GROMMET, HT CORD			Slow-moving
26	1	A209000000	PLATE INSULATOR			Slow-moving
27	1	X524001900	LABEL			Slow-moving
28	1	C304000010	SPIKED			Slow-moving
29	2	9114505020	BOLT HS TAPPING	Y2014-549		
30	1	9114505016	BOLT HS TAPPING	Y2014-549		
31	1	C310000000	CATCHER CHAIN			Medium-moving
32	1	15011404920	BUSHING			Slow-moving
33	1	P021009856	COVER ENGINE ASY	2009-401		
34	1	V341000050	WASHER SQUARE			Slow-moving
35	2	43301119830	BOLT			Slow-moving
36	1	43611413930	VALVE, CHECK			Medium-moving
37	1	P021007630	CAP ASY, TANK			Slow-moving
38	1	90072100025	O ring CS-4200			
39	1	A365000050	CONNECTOR,CAP			Medium-moving
40	2	10091815130	CAP, CUSHION			Slow-moving
41	2	10091533930	BOLT			Slow-moving
42	2	10091060030	CUSHION			Medium-moving
43	4	90016205030	BOLT, H.S. 5*30			
44	2	V420001250	Cushion			Medium-moving
45	1	89063138130	LABEL, CAUTION			Slow-moving

Copyright YAMABIKO EUROPE SA

Nummer	Antal	Kode	Beskrivelse	Vedhæftet fil	Recommended Stock Item	Remark
46	1	89034539230	LABEL,CAUTION			Slow-moving
47	1	V341000060	WASHER, SQUARE			Slow-moving
48	1	V341000070	WASHER, SQUARE			Slow-moving

Copyright YAMABIKO EUROPE SA

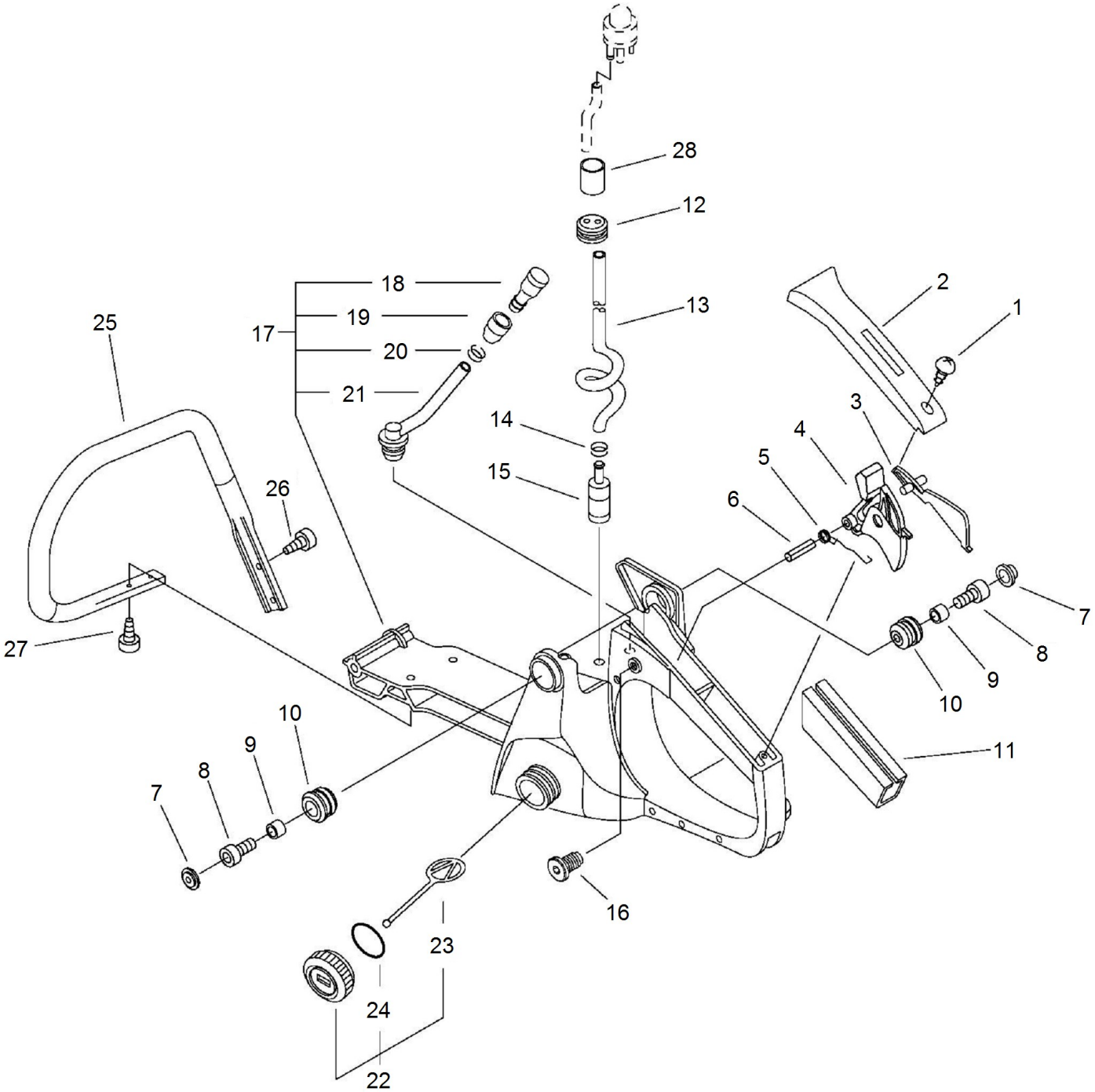

Copyright YAMABIKO EUROPE SA

Illustration handles, petrol tank

Nummer	Antal	Kode	Beskrivelse	Vedhæftet fil	Recommended Stock Item	Remark
1	1	90025304014	SCREW 4*14			
2	1	35115535430	COVER, HANDLE (BL)			Slow-moving
3	1	C460000072	LOCKOUT, THROTTLE			Slow-moving
4	1	C450000212	CONTROL, THROTTLE			Slow-moving
5	1	V452000260	SPRING,TORSION			Medium-moving
6	1	90034540030	TENSIONER, CHAIN			
7	2	10091815130	CAP, CUSHION			Slow-moving
8	2	90010504020	BOLT	Y2014-549		
9	2	10091515131	Supporter, Cushion	Y2014-549		Slow-moving
10	2	V400000051	Cushion			Medium-moving
11	1	35111119830	Grip			Slow-moving
12	1	13211544330	GROMMET			Slow-moving
13	1	13201000760	PIPE 3* 5*250			Slow-moving
14	1	13201309820	CLIP			Slow-moving
15	1	13120519831	STRAINER, FUEL	2009-398		Fast-moving
16	1	V162000040	PLUG			Slow-moving
17	1	P021010592	HANDLE SET, REAR			
18	1	13130056430	"VALVE, CHECK"			Medium-moving
19	1	13132840630	COVER, VENT			Slow-moving
20	1	13201326630	CLIP			Slow-moving
21	1	13201239931	PIPE			Slow-moving
22	1	P021010600	FUEL CAP ASY			
23	1	A365000050	CONNECTOR,CAP			Medium-moving
24	1	90072000022	O-RING 22			
25	1	C400000430	Handle, Front			Slow-moving
26	2	9114505020	BOLT HS TAPPING	Y2014-549		
27	2	9114505016	BOLT HS TAPPING	Y2014-549		
28	1	V475003970	TUBE			Slow-moving

Copyright YAMABIKO EUROPE SA

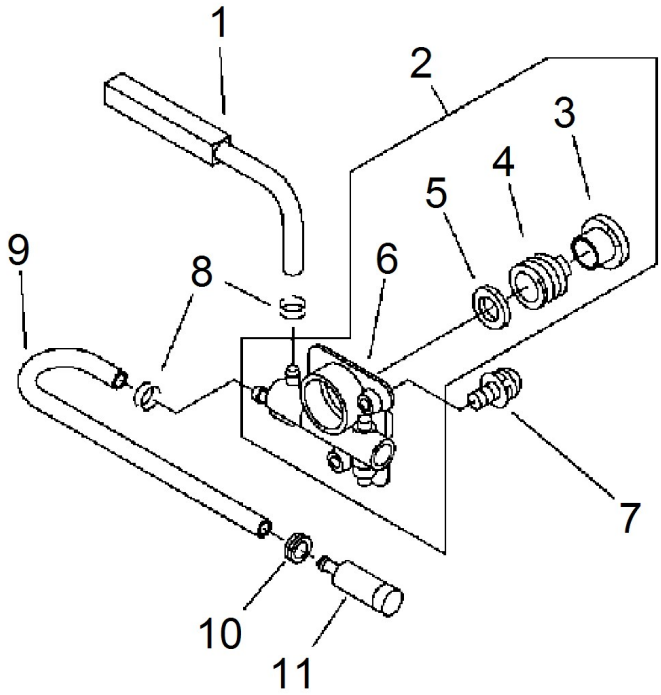

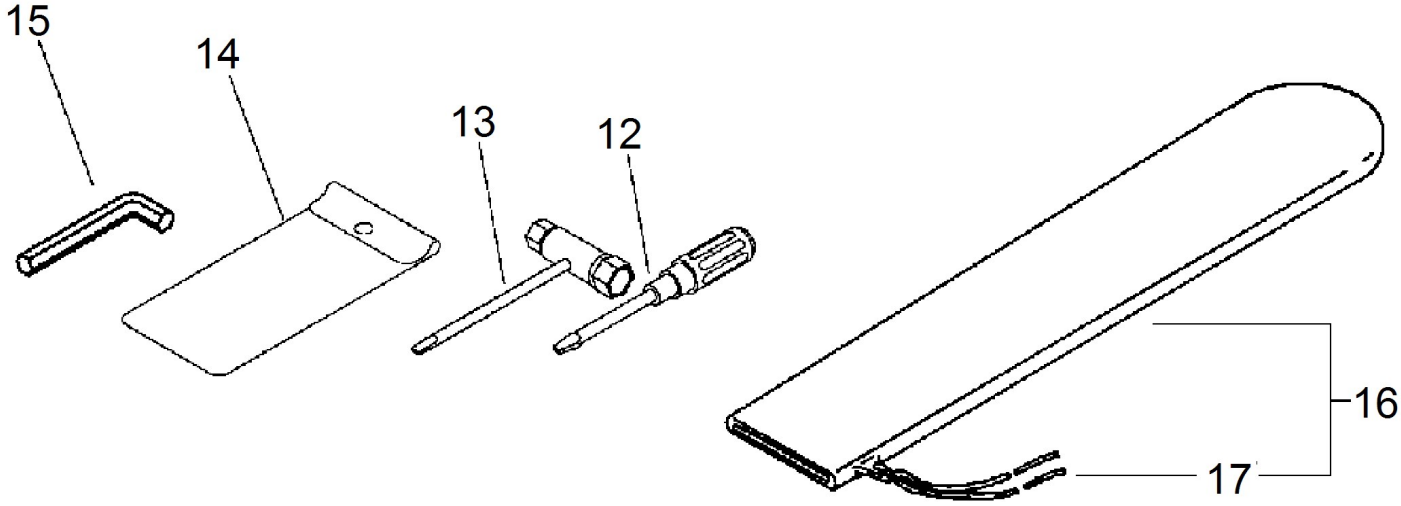

Copyright YAMABIKO EUROPE SA

Illustration oil pump, tool

Nummer	Antal	Kode	Beskrivelse	Vedhæftet fil	Recommended Stock Item	Remark
1	1	43721039931	PIPE			Slow-moving
2	1	P021012150	AUTO-OILER ASY			
3	1	V356000390	COLLAR,10	Y2010-445		Slow-moving
3	1	V356000352	Oil pump drive with .325" ring sprocket			Slow-moving
4	1	V652000030	GEAR,WORM			Medium-moving
5	1	V308000030	WASHER,CIRCULAR 11			Slow-moving
6	1	C022000020	AUTO-OILER ASSEMBLY			Slow-moving
7	2	90023804012	SCREW			
8	2	13201326630	CLIP			Slow-moving
9	1	43721035430	PIPE			Slow-moving
10	1	13211512330	grommet			Slow-moving
11	1	43620514730	STRAINER, OIL	Y2014-549		Medium-moving
12	1	89581203930	SCREWDRIVER 50			Slow-moving
13	1	X602000080	TOOL,WRENCH			Slow-moving
14	1	89851007130	BAG, TOOL			
15	1	89561000130	L-WRENCH (4MM)			Slow-moving
16	1	P021014660	SCABBARD, CHAIN			
17	1	89856814530	ROPE			Medium-moving

Copyright YAMABIKO EUROPE SA

Spezialwerkzeuge

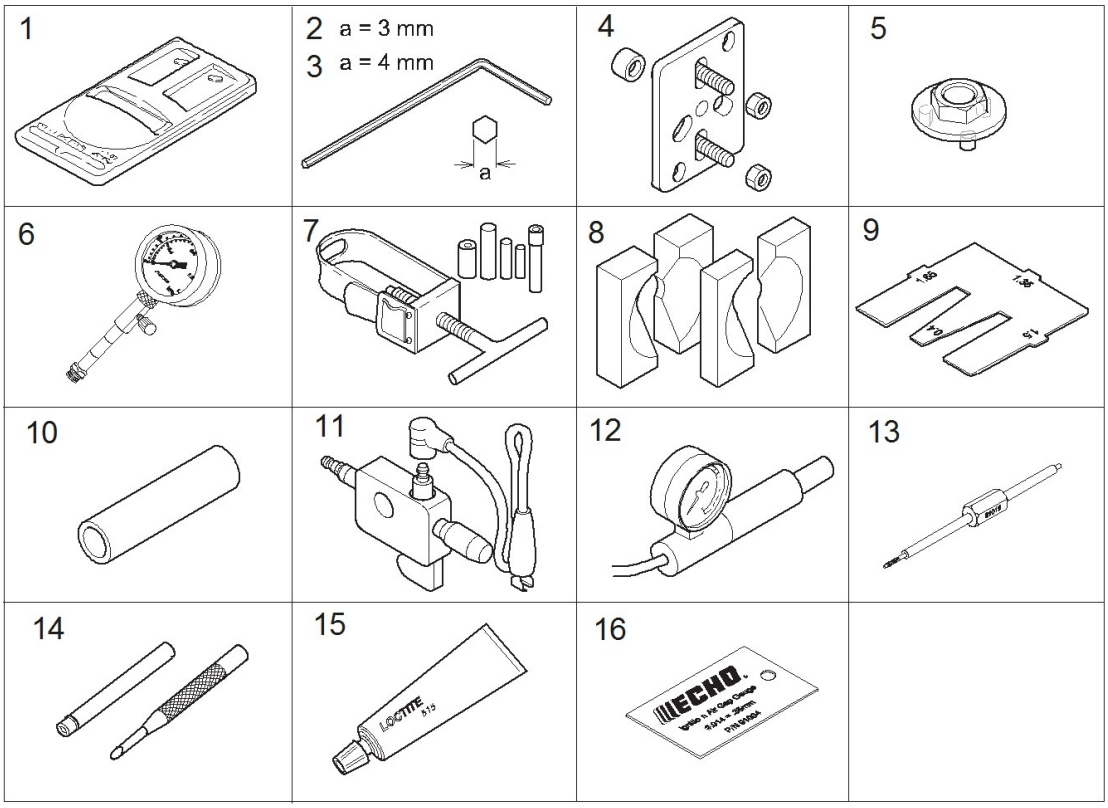

Copyright YAMABIKO EUROPE SA

Illustration special tools

Nummer	Antal	Kode	Beskrivelse	Vedhæftet fil	Recommended Stock Item	Remark
1		PET1000R	TACHOMETER			
2		WAX605000180	TOOL,L WRENCH			
3		WA89561079920	L-WRENCH (4MM)			
4		WA89750103938	Puller, Magneto			
5		WA89750516133	TOOL CLUTCH			
6		WA91037	COMPRESSION GAUGE			
7		WA89770230131	TOOL, PISTON PIN			
8		WA89770106030	BEARING WEDGE			
9		WA89756319830	GAUGE,METERING LEVER			
10		WA89772609130	OIL SEAL TOOL			
11		WA89780079931	TESTER SPARK			
12		WA89780330133	PRESSURE TESTER			
13		WA91019	LIMITER CAP TOOL			
14		WA500500	WELCH PLUG TOOL			
15		36888888	HONDA GX-160 ENGINE			
16		WA91004	IGNIT. AIR GAP GAUGE			

Copyright YAMABIKO EUROPE SA

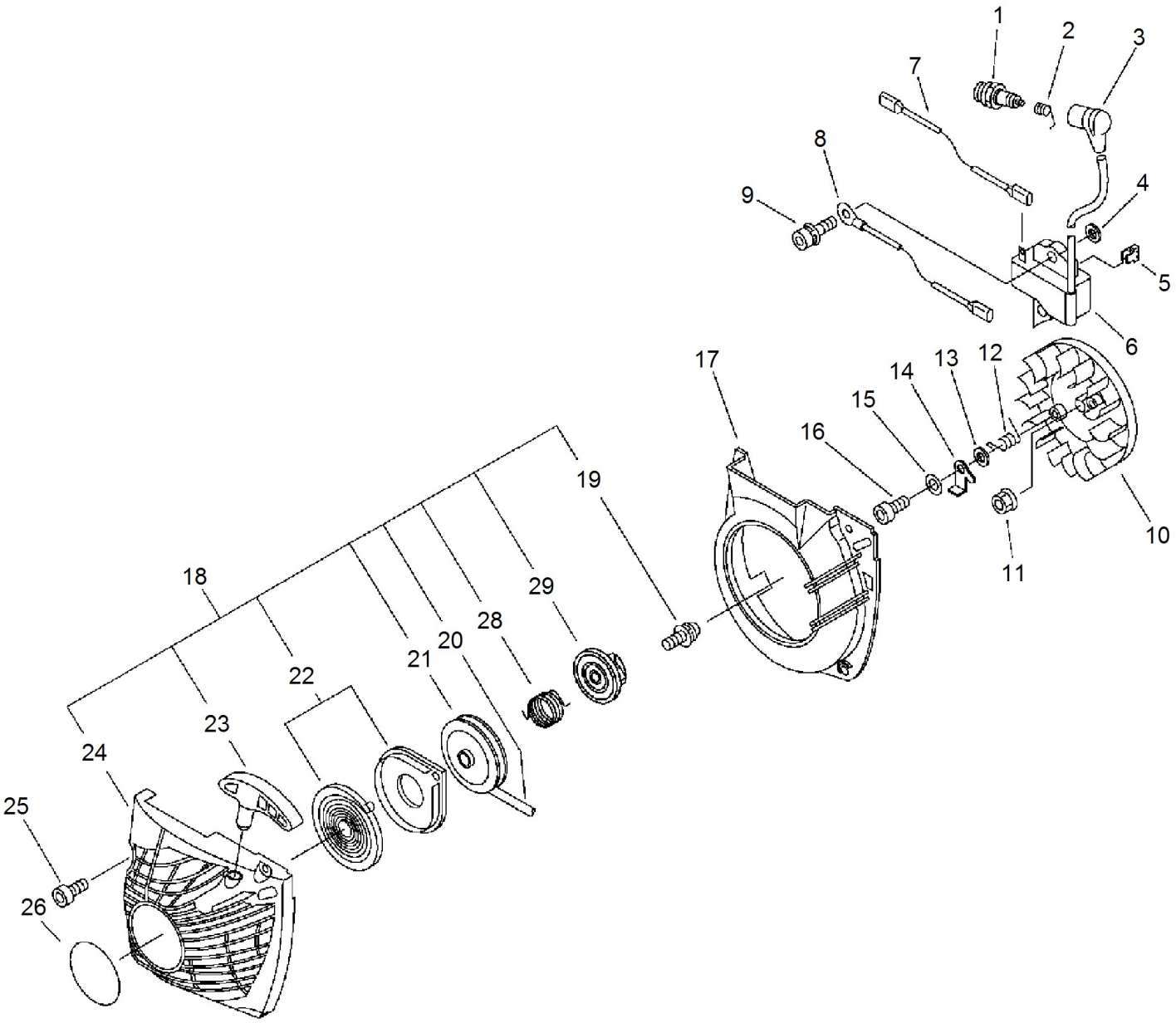

Copyright YAMABIKO EUROPE SA

Illustration starter, ignition

Nummer	Antal	Kode	Beskrivelse	Vedhæftet fil	Recommended Stock Item	Remark
1	1	A425000000	SPARKPLUG			Fast-moving
2	1	A426000010	TERMINAL,SPARKPLUG			Slow-moving
3	1	A427000013	CAP,SPARK PLUG	2008-372		Slow-moving
4	2	15011716430	SPACER			Slow-moving
5	1	V490000310	CLIP			Slow-moving
6	1	A411000264	COIL, IGNITION			Slow-moving
7	1	V485000680	lead			Slow-moving
8	1	V485000620	lead			Slow-moving
9	2	90016205020	BOLT HSH			
10	1	A409000272	ROTOR, MAGNETO			Slow-moving
11	1	90051500008	NUT, FLANGE			
12	2	17723435430	SPRING, RETURN			Medium-moving
13	2	17724704630	SPACER, RATCHET			Slow-moving
14	2	A514000050	PAWL			Slow-moving
15	2	90060300005	WASHER 5			
16	2	V203000090	BOLT,5			Slow-moving
17	1	A172000572	COVER,FAN	2009-401		Slow-moving
18	1	A051000981	STARTER,RECOIL ASY	2009-401		Medium-moving
19	1	17723661830	SCREW			
20	1	P022008440	ROPE, STARTER			Medium-moving
21	1	A506000080	REEL,ROPE	Y2011-481		Slow-moving
22	1	P022010440	SPRING KIT, REWIND			Medium-moving
23	1	P022005890	GRIP, STARTER			Slow-moving
24	1	A500000421	CASE, STARTER			Slow-moving
25	4	9114505020	BOLT HS TAPPING	Y2014-549		
26	1	X502000410	LABEL,ECHO			Slow-moving
28	1	V452000220	SPRING,TORSION	Y2011-481		Medium-moving
29	1	A507000021	CATCHER,PAWL			Slow-moving

Copyright YAMABIKO EUROPE SA