CS-420ES (37014291-)

Dokumenter

- air filter, exhaust
- Carburettor WT-950
- clutch, chain brake
- cutting set
- Engine, housing, oil tank
- handles, petrol tank
- oil pump, tool
- special tools
- starter, ignition

Copyright YAMABIKO EUROPE SA

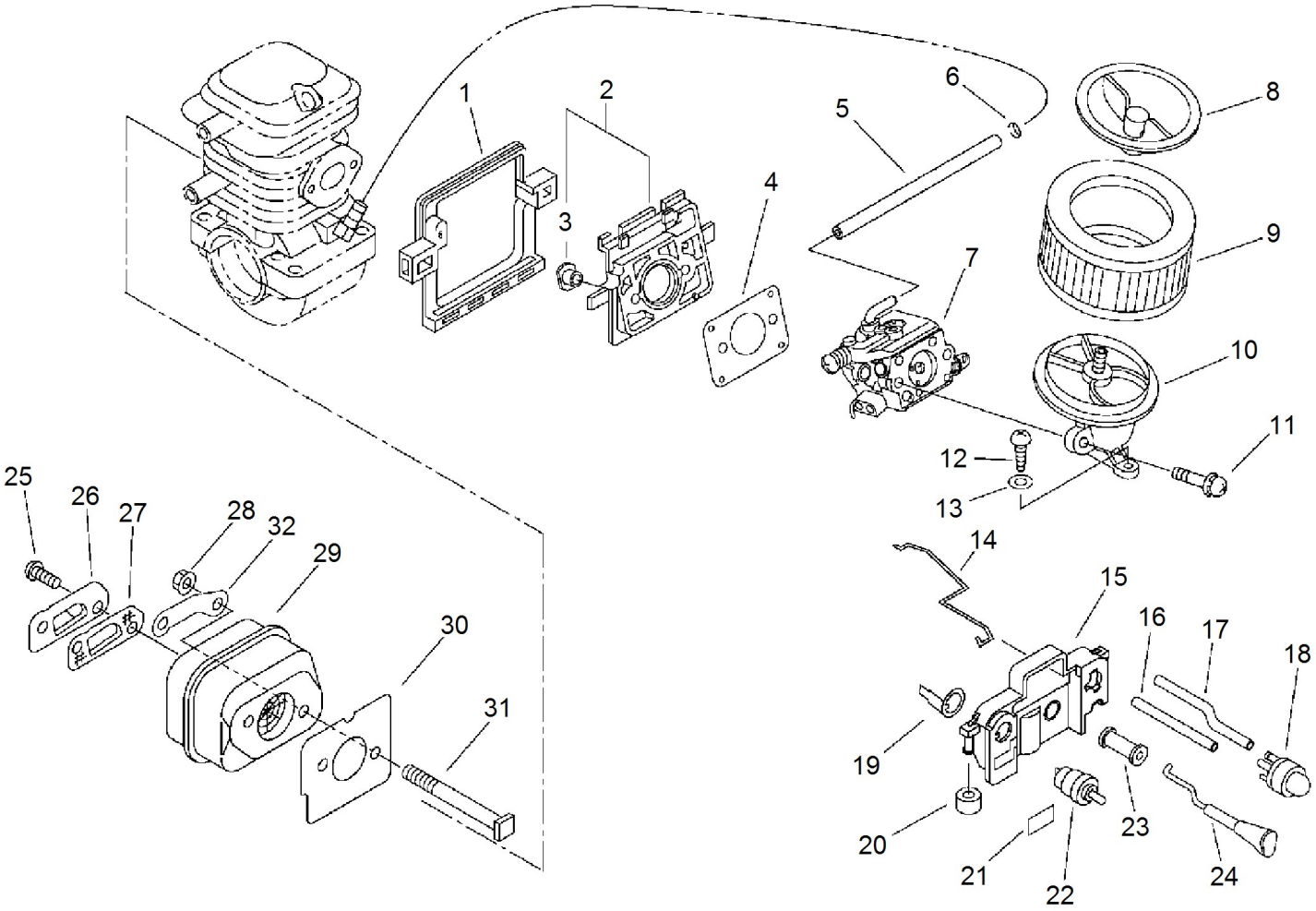

Copyright YAMABIKO EUROPE SA

Illustration air filter, exhaust

Nummer	Antal	Kode	Beskrivelse	Vedhæftet fil	Recommended Stock Item	Remark
1	1	V420001420	CUSHION			Medium-moving
2	1	13000739932	INSULATOR			Slow-moving
3	2	13002033330	NUT			Slow-moving
4	1	V103000280	GASKET,INTAKE			Fast-moving
5	1	V471001600	PIPE			Slow-moving
6	1	13201309820	CLIP			Slow-moving
7	1	A021001790	CARBURETOR, DIAPHRAGM	2009-401		Medium-moving
8	1	13040538332	BRACKET, AIR CLEANER			Slow-moving
9	1	13030039730	CLEANER ASM., AIR			Fast-moving
10	1	13030139935	ADAPTER, INTAKE			Slow-moving
11	2	90023805050	SCREW			
12	1	90025305020	SCREW 5*20			
13	1	90060000005	WASHER 5			
14	1	C454000100	Rod Throttle			Slow-moving
15	1	A439000145	BRACKET,SWITCH			Slow-moving
16	1	V471001280	PIPE			Slow-moving
17	1	V471001470	PIPE			Slow-moving
18	1	12318139130	PUMP, FUEL			Fast-moving
19	1	V486000021	PRIMER			Slow-moving
20	2	35113439930	SPACER			Medium-moving
21	1	89015739130	LABEL, SWITCH			Slow-moving
22	1	16340038330	SWITCH IGNITION			Slow-moving
23	1	17881014534	GROMMET			Slow-moving
24	1	A241000140	ROD CHOKE			Slow-moving
25	2	90022004008	Screw 4*8			
26	1	A313000810	GUIDE, EXHAUST			Slow-moving
27	1	A310000060	SCREEN, ARRESTOR			Medium-moving
28	2	90051600005	NUT, FRANGE 5			
29	1	A300000680	MUFFLER, EXHAUST			Slow-moving
30	1	V104000731	GASKET,EXHAUST			Fast-moving
31	2	V203000220	screw, 5			Slow-moving
32	1	V150001820	PLATE, EYE			Slow-moving

Copyright YAMABIKO EUROPE SA

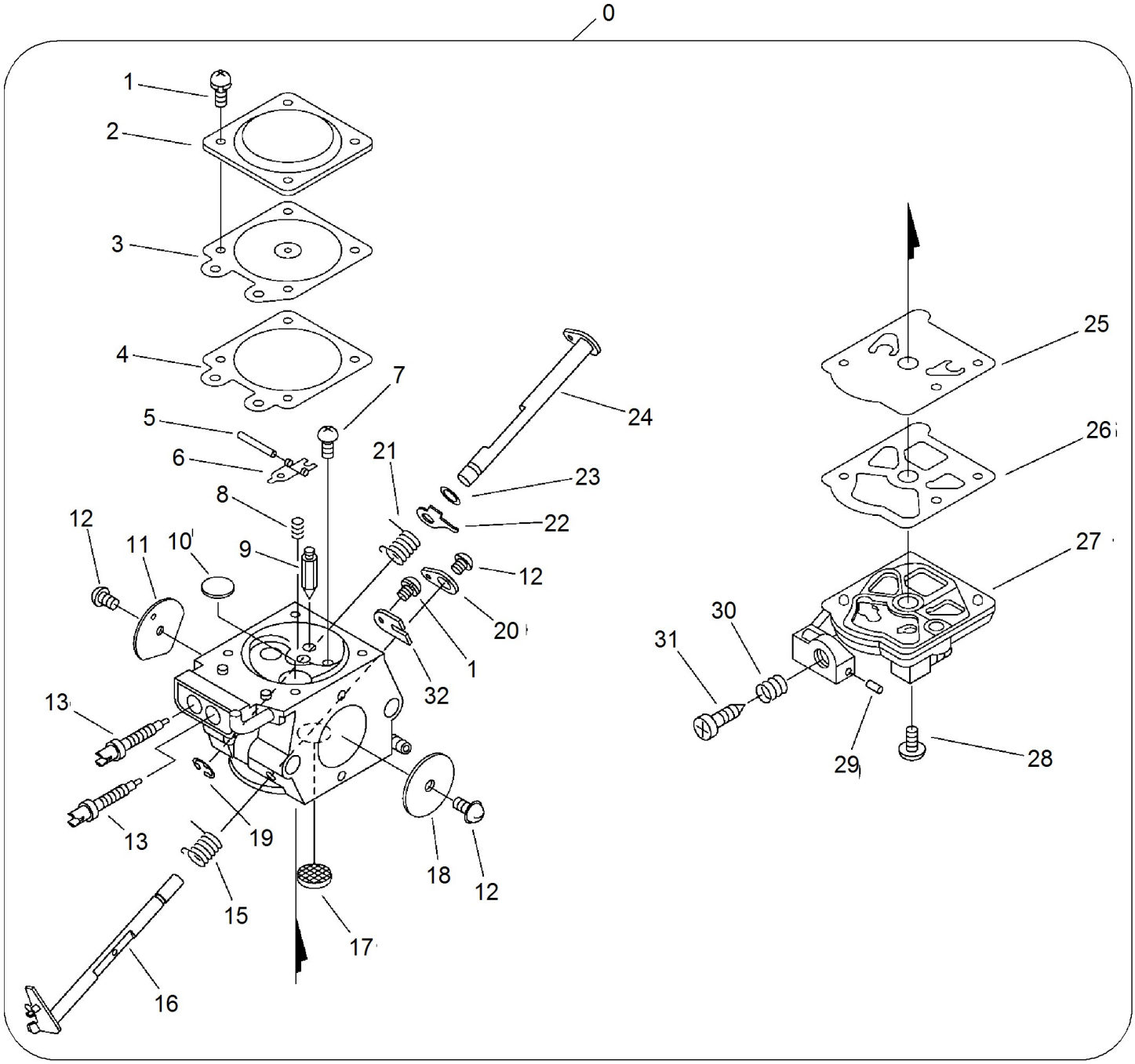

Copyright YAMABIKO EUROPE SA

Illustration Carburettor WT-950

Nummer	Antal	Kode	Beskrivelse	Vedhæftet fil	Recommended Stock Item	Remark
0	1	A021001790	CARBURETOR, DIAPHRAGM	2009-401		Medium-moving
1	1	12313002960	SCREW			Slow-moving
2	1	12314203930	COVER, M. DIAPHRAGM			Slow-moving
3	1	P003001850	DIAPHRAGM, METERING			Fast-moving
4	1	12314003930	GASKET, M. DIAPHRAGM			Fast-moving
5	1	12313803930	PIN, METERING LEVER			Slow-moving
6	1	12312303930	LEVER, METERING			Slow-moving
7	1	12313903930	SCREW, M. LEVER PIN			Slow-moving
8	1	12312239330	SPRING, METER. LEVER			
9	1	12313719830	VALVE, INLET NEEDLE			Slow-moving
10	1	12314610631	PLUG, WELCH			Slow-moving
11	1	P003001790	VALVE, CHOKE			
12	3	12311438830	SCREW			Slow-moving
13	2	P003002270	NEEDLE			Slow-moving
15	1	12311337530	SPRING, THROTTLE RTN			Medium-moving
16	1	P003001810	SHAFT ASY, THROTTLE			
17	1	12312610631	SCREEN, INLET			Medium-moving
18	1	12311610530	VALVE, THROTTLE			Slow-moving
19	1	12312715030	RING			Slow-moving
20	1	P003001780	LEVER, THROTTLE			
21	1	P003000140	SPRING			
22	1	P003001510	LEVER-FAST IDLE			Slow-moving
23	1	12314926030	WASHER			Slow-moving
24	5	P003000150	CHOKE, SHAFT			
25	1	12311215030	DIAPHRAGM, FUEL PUMP			Fast-moving
26	1	12312515030	GASKET, FUEL PUMP			Fast-moving
27	1	12312438330	COVER FUEL PUMP			
28	1	12311003930	SCREW, PUMP COVER			Slow-moving
29	1	12317815030	Plug, Friction			
30	1	12313304260	SPRING, IDLE ADJUST			Slow-moving
31	1	12313404260	SCREW, IDLE ADJUST			Slow-moving
32	1	12312703930	CLIP, THROTTLE SHAFT			Slow-moving

Copyright YAMABIKO EUROPE SA

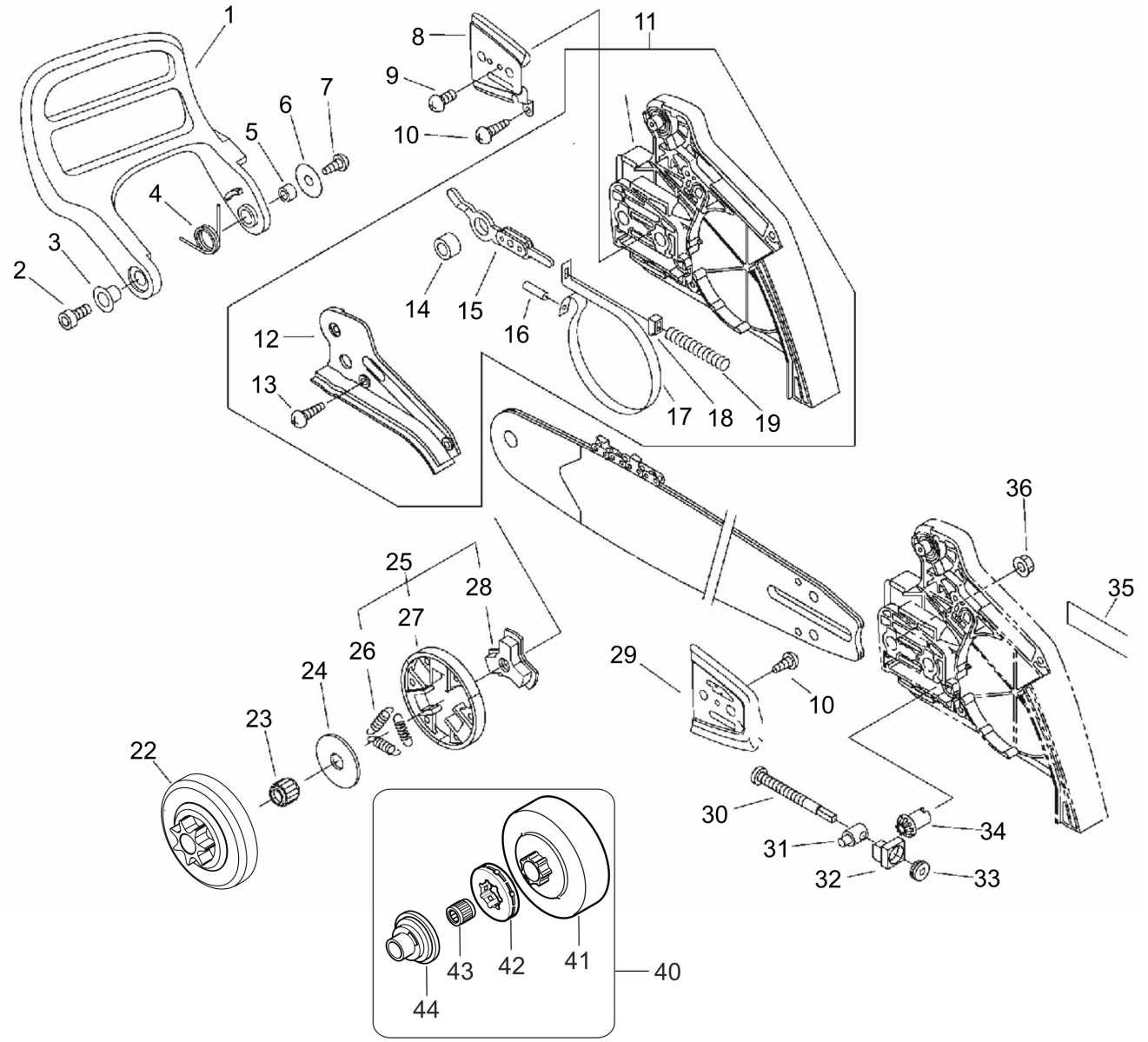

Copyright YAMABIKO EUROPE SA

Illustration clutch, chain brake

Nummer	Antal	Kode	Beskrivelse	Vedhæftet fil	Recommended Stock Item	Remark
1	1	C320000112	LEVER, BRAKE			Slow-moving
2	1	9114505016	BOLT HS TAPPING	Y2014-549		
3	1	V356000300	COLLAR, 10			Slow-moving
4	1	V452000250	SPRING,TORSION			Medium-moving
5	1	43311635430	SPACER 8*12*9			Slow-moving
6	1	17721403930	WASHER			Slow-moving
7	1	V202000070	Screw CS-370ES			Slow-moving
8	1	C305000012	PLATE, GUIDE			Slow-moving
8	1	C305000011	PLATE, GUIDE			Slow-moving
9	1	90022003006	BOLT			
10	2	V202000060	Bolt			Slow-moving
11	1	P021017220	BRAKE ASY, CHAIN			
12	1	C345000211	Cover, Brake			Slow-moving
13	3	V202000060	Bolt			Slow-moving
14	1	43311635430	SPACER 8*12*9			Slow-moving
15	1	C334000090	CONNECTOR, BRAKE			Slow-moving
16	1	9305030098	ROLLER			
17	1	C328000080	BAND, BRAKE			Slow-moving
18	1	V376000450	SPACER			Slow-moving
19	1	V450000070	SPRING,COMPRESSION			Medium-moving
22	1	A556000480	DRUM, CLUTCH	Y2010-445		Medium-moving
23	1	17501200831	BEARING, NEEDLE	Y2010-445		Medium-moving
24	1	17501939430	PLATE, CLUTCH	2008-371		Slow-moving
25	1	A056000180	CLUTCH	2008-371		Medium-moving
26	3	V451000500	SPRING,TENSION	2008-371		Medium-moving
27	1	P021007050	CLUTCH SHOE SET	2008-371		Medium-moving
28	1	A552000070	HUB, CLUTCH	2008-371		Medium-moving
29	1	43301239930	PLATE, GUIDE			Slow-moving
30	1	V203000110	BOLT,5			Slow-moving
31	1	C309000030	TENSIONER,CHAIN			Slow-moving
32	1	V355000270	COLLAR,8	Y2015-563		Slow-moving
33	1	V651000011	GEAR,BEVEL			Slow-moving
34	1	V651000001	GEAR,BEVEL			Slow-moving
35	1	X502000340	LABEL,ECHO			Slow-moving
36	2	43301912330	NUT, FLANGE 8			Slow-moving
40	1	P021035570	Kit, conversion to ring sprocket .325"	Y2010-445		
41	1	A556001270	Clutch drum for track sprocket	Y2010-445		Medium-moving
42	1	17511412530	RIM, SPROCKET 31569	Y2010-445		Medium-moving
43	1	10001212331	BEARING, NEEDLE	Y2010-445		Medium-moving
44	1	V356000352	Oil pump drive with .325" ring sprocket			Slow-moving

Copyright YAMABIKO EUROPE SA

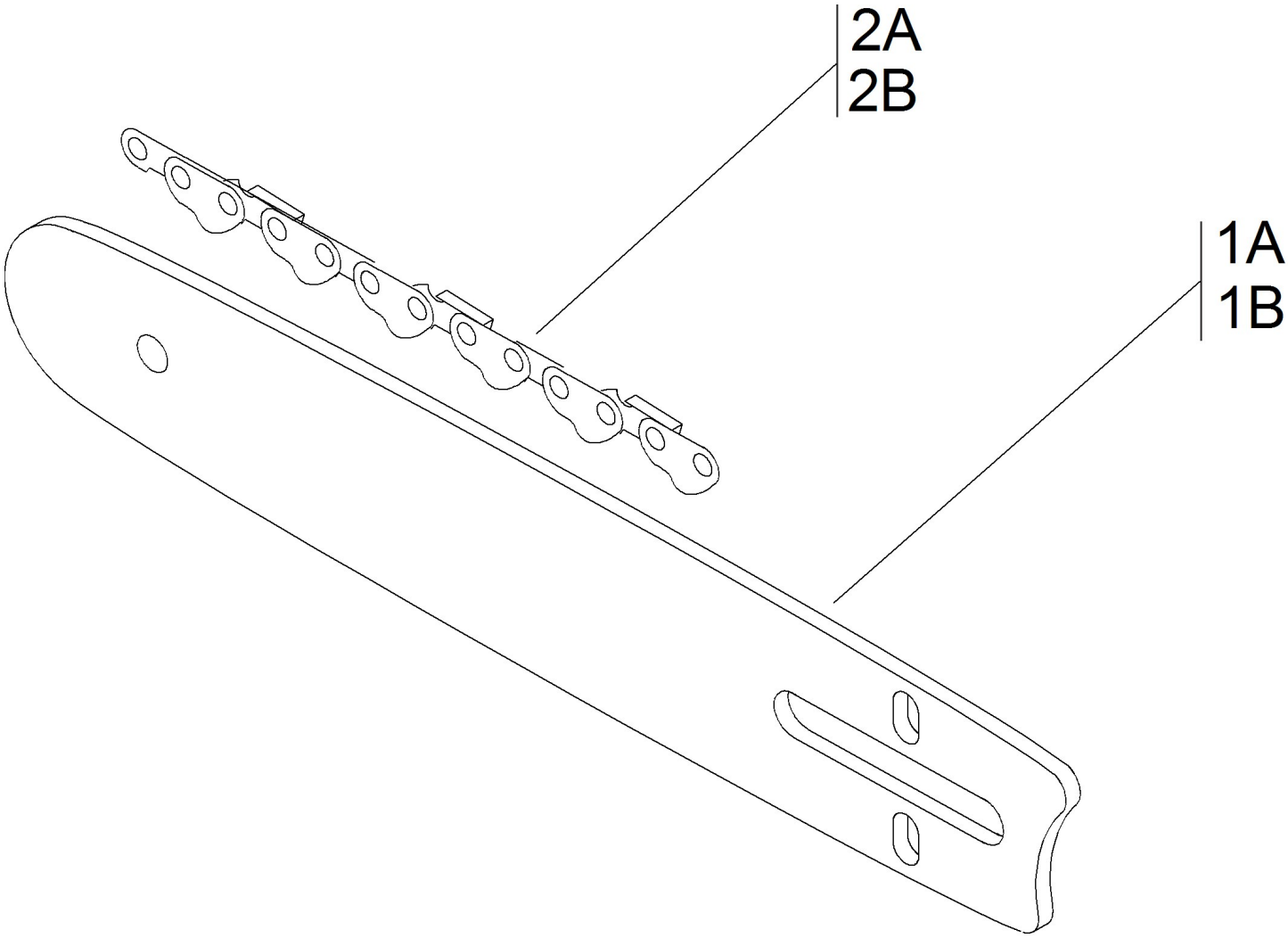

Copyright YAMABIKO EUROPE SA

Illustration cutting set

Nummer	Antal	Kode	Beskrivelse	Vedhæftet fil	Recommended Stock Item	Remark
1A	1	S38RD58325	Bar for Chain Saw 430521-30131			
1B	1	S33RD58325	Chain bar 33 cm / 56 drive links (1.5) 325"			
2A	1	KE38153264	SAW CHAIN 15" 21BP-64X			
2B	1	KE33153256	SAW CHAIN 13" 21BP-56X			

Copyright YAMABIKO EUROPE SA

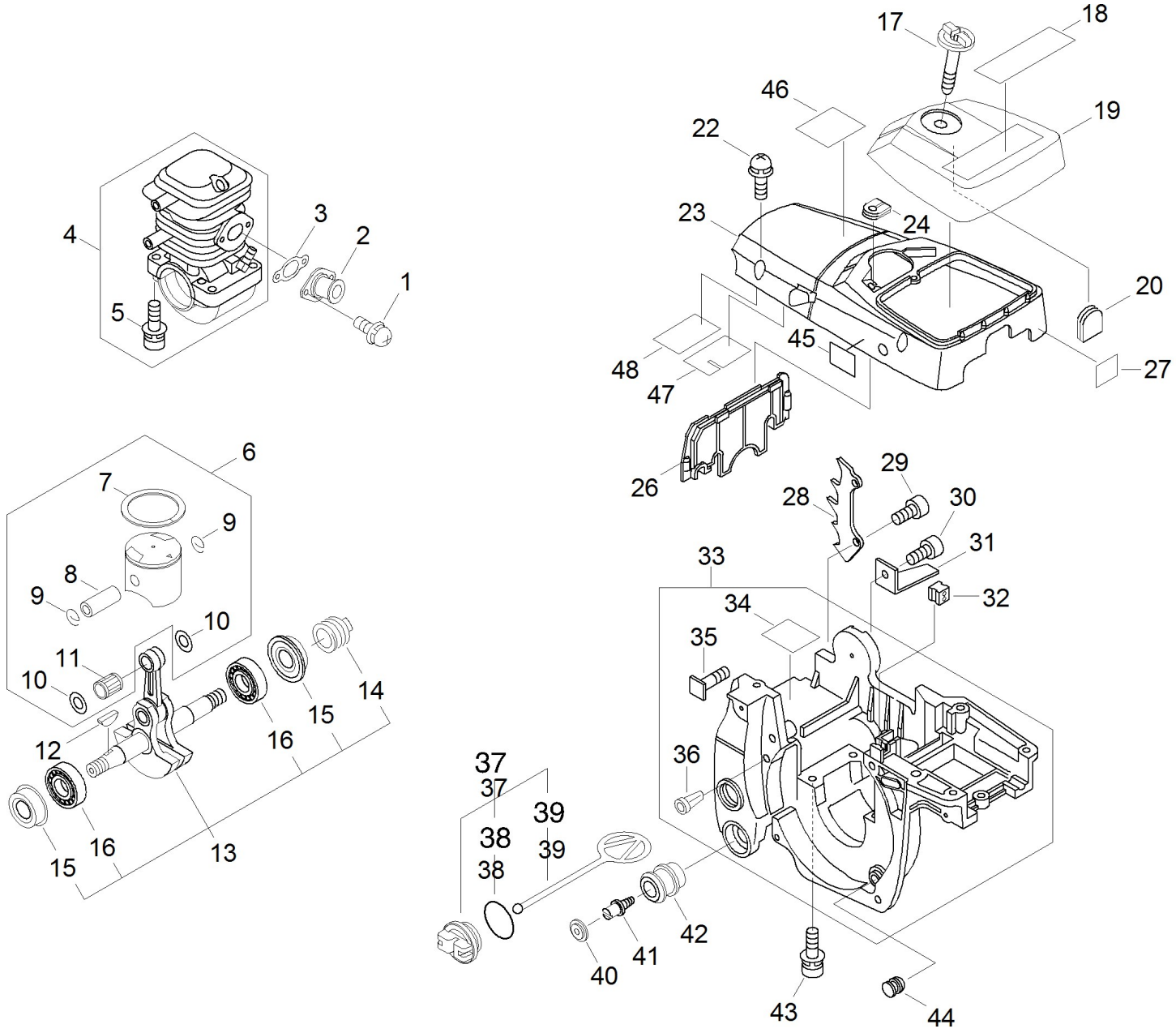

Copyright YAMABIKO EUROPE SA

Nummer	Antal	Kode	Beskrivelse	Vedhæftet fil	Recommended Stock Item	Remark
1	2	90023805014	SCREW			
2	1	A202000060	BELLOWS, INTAKE			Slow-moving
3	1	V103000290	GASKET,INTAKE			Fast-moving
4	1	P021010574	CRANKCASE SET	Y2009-436		
5	4	90016205022	BOLT, H.S. 5*22			
6	1	P021010582	PISTON KIT	2009-426		
7	1	A101000160	RING, PISTON			Medium-moving
8	1	V607000000	PIN,ENG 9			Slow-moving
9	2	10001503931	CIRCLIP, PISTON PIN			Slow-moving
10	2	10001453630	SPACER, PISTON PIN			Slow-moving
11	1	10001216131	BEARING, NEEDLE			Slow-moving
12	1	10014212330	KEY, WOODRUFF			Slow-moving
13	1	P021013620	CRANKSHAFT ASY			
14	1	V652000030	GEAR,WORM			Medium-moving
15	2	V505000011	SEAL,OIL 12			Slow-moving
15	2	V505000010	SEAL,OIL 12			Slow-moving
16	2	90088836201	BEARING, BALL			
17	1	A235000020	KNOB,CLEANER LID			Slow-moving
18	1	X503008450	LABEL,MODEL			Slow-moving
19	1	A232000023	LID, CLEANER			Slow-moving
20	1	13033832430	PLUG, COVER			Medium-moving
22	3	90023805020	SCREW			
23	1	A160000764	Cover, cylinder, CS-370/CS-420ES			Slow-moving
24	1	V135000010	GROMMET, HT CORD			Slow-moving
26	1	A209000000	PLATE INSULATOR			Slow-moving
27	1	X524001900	LABEL			Slow-moving
28	1	C304000010	SPIKED			Slow-moving
29	2	9114505020	BOLT HS TAPPING	Y2014-549		
30	1	9114505016	BOLT HS TAPPING	Y2014-549		
31	1	C310000000	CATCHER CHAIN			Medium-moving
32	1	15011404920	BUSHING			Slow-moving
33	1	P021009856	COVER ENGINE ASY	2009-401		
34	1	V341000050	WASHER SQUARE			Slow-moving
35	2	43301119830	BOLT			Slow-moving
36	1	43611413930	VALVE, CHECK			Medium-moving
37	1	P021007630	CAP ASY, TANK			Slow-moving
38	1	90072100025	O ring CS-4200			
39	1	A365000050	CONNECTOR,CAP			Medium-moving
40	2	10091815130	CAP, CUSHION			Slow-moving
41	2	10091533930	BOLT			Slow-moving
42	2	10091060030	CUSHION			Medium-moving
43	4	90016205030	BOLT, H.S. 5*30			
44	2	V420001250	Cushion			Medium-moving
45	1	89063138130	LABEL, CAUTION			Slow-moving

Copyright YAMABIKO EUROPE SA

Nummer	Antal	Kode	Beskrivelse	Vedhæftet fil	Recommended Stock Item	Remark
46	1	89034539230	LABEL,CAUTION			Slow-moving
47	1	V341000060	WASHER, SQUARE			Slow-moving
48	1	V341000070	WASHER, SQUARE			Slow-moving

Copyright YAMABIKO EUROPE SA

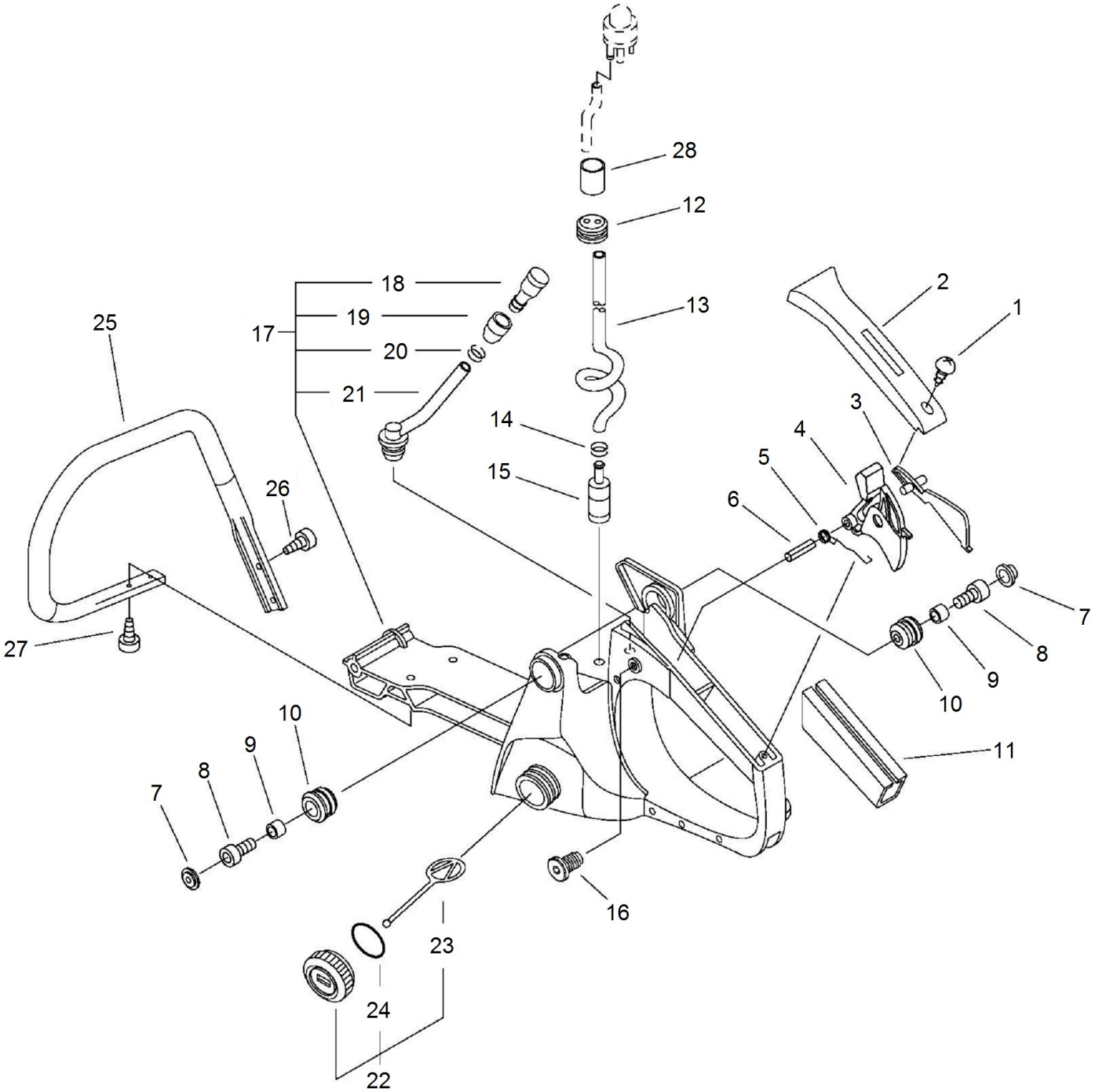

Copyright YAMABIKO EUROPE SA

Illustration handles, petrol tank

Nummer	Antal	Kode	Beskrivelse	Vedhæftet fil	Recommended Stock Item	Remark
1	1	90025304014	SCREW 4*14			
2	1	35115535430	COVER, HANDLE (BL)			Slow-moving
3	1	C460000072	LOCKOUT, THROTTLE			Slow-moving
4	1	C450000212	CONTROL, THROTTLE			Slow-moving
5	1	V452000260	SPRING,TORSION			Medium-moving
6	1	90034540030	TENSIONER, CHAIN			
7	2	10091815130	CAP, CUSHION			Slow-moving
8	2	90010504020	BOLT	Y2014-549		
9	2	10091515131	Supporter, Cushion	Y2014-549		Slow-moving
10	2	V400000051	Cushion			Medium-moving
11	1	35111119830	Grip			Slow-moving
12	1	13211544330	GROMMET			Slow-moving
13	1	13201000760	PIPE 3* 5*250			Slow-moving
14	1	13201309820	CLIP			Slow-moving
15	1	13120519831	STRAINER, FUEL	2009-398		Fast-moving
16	1	V162000040	PLUG			Slow-moving
17	1	P021010592	HANDLE SET, REAR			
18	1	13130056430	"VALVE, CHECK"			Medium-moving
19	1	13132840630	COVER, VENT			Slow-moving
20	1	13201326630	CLIP			Slow-moving
21	1	13201239931	PIPE			Slow-moving
22	1	P021010600	FUEL CAP ASY			
23	1	A365000050	CONNECTOR,CAP			Medium-moving
24	1	90072000022	O-RING 22			
25	1	C400000430	Handle, Front			Slow-moving
26	2	9114505020	BOLT HS TAPPING	Y2014-549		
27	2	9114505016	BOLT HS TAPPING	Y2014-549		
28	1	V475003970	TUBE			Slow-moving

Copyright YAMABIKO EUROPE SA

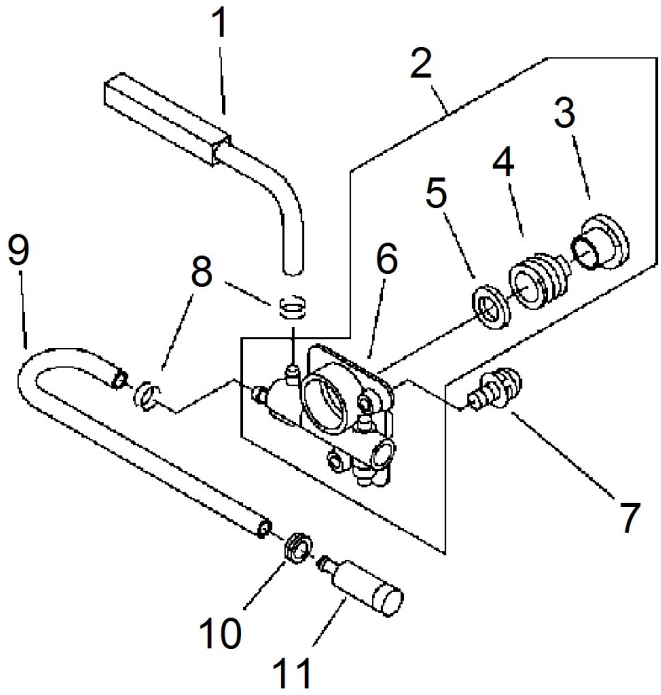

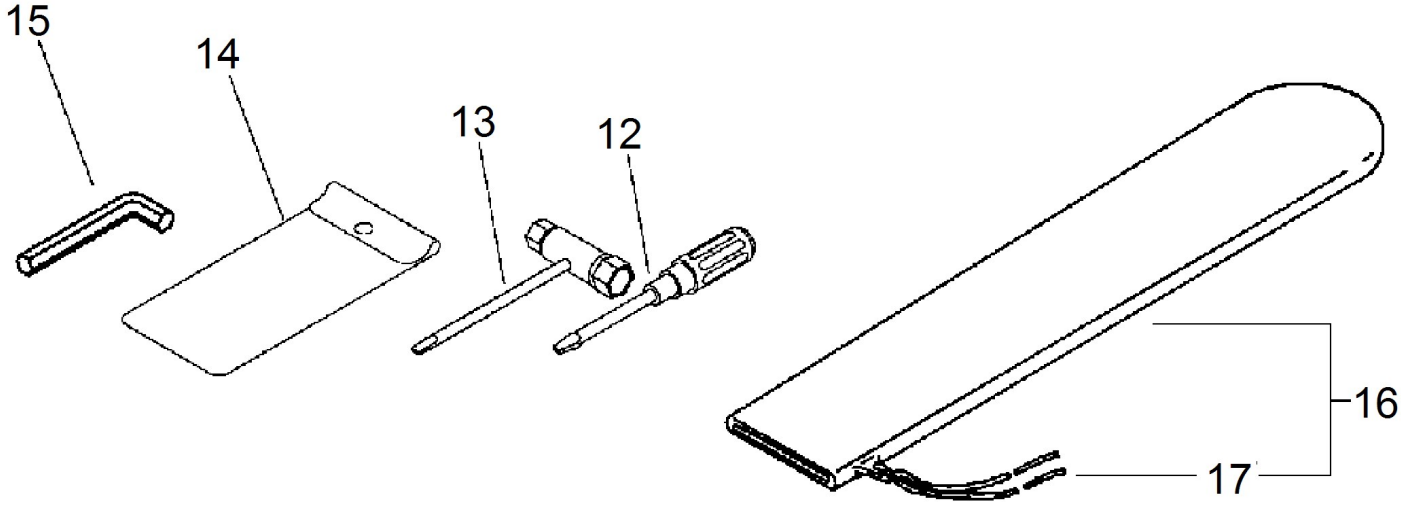

Copyright YAMABIKO EUROPE SA

Illustration oil pump, tool

Nummer	Antal	Kode	Beskrivelse	Vedhæftet fil	Recommended Stock Item	Remark
1	1	43721039931	PIPE			Slow-moving
2	1	P021012150	AUTO-OILER ASY			
3	1	V356000390	COLLAR,10	Y2010-445		Slow-moving
3	1	V356000352	Oil pump drive with .325" ring sprocket			Slow-moving
4	1	V652000030	GEAR,WORM			Medium-moving
5	1	V308000030	WASHER,CIRCULAR 11			Slow-moving
6	1	C022000020	AUTO-OILER ASSEMBLY			Slow-moving
7	2	90023804012	SCREW			
8	2	13201326630	CLIP			Slow-moving
9	1	43721035430	PIPE			Slow-moving
10	1	13211512330	grommet			Slow-moving
11	1	43620514730	STRAINER, OIL	Y2014-549		Medium-moving
12	1	89581203930	SCREWDRIVER 50			Slow-moving
13	1	X602000080	TOOL,WRENCH			Slow-moving
14	1	89851007130	BAG, TOOL			
15	1	89561000130	L-WRENCH (4MM)			Slow-moving
16	1	P021014660	SCABBARD, CHAIN			
17	1	89856814530	ROPE			Medium-moving

Copyright YAMABIKO EUROPE SA

Spezialwerkzeuge

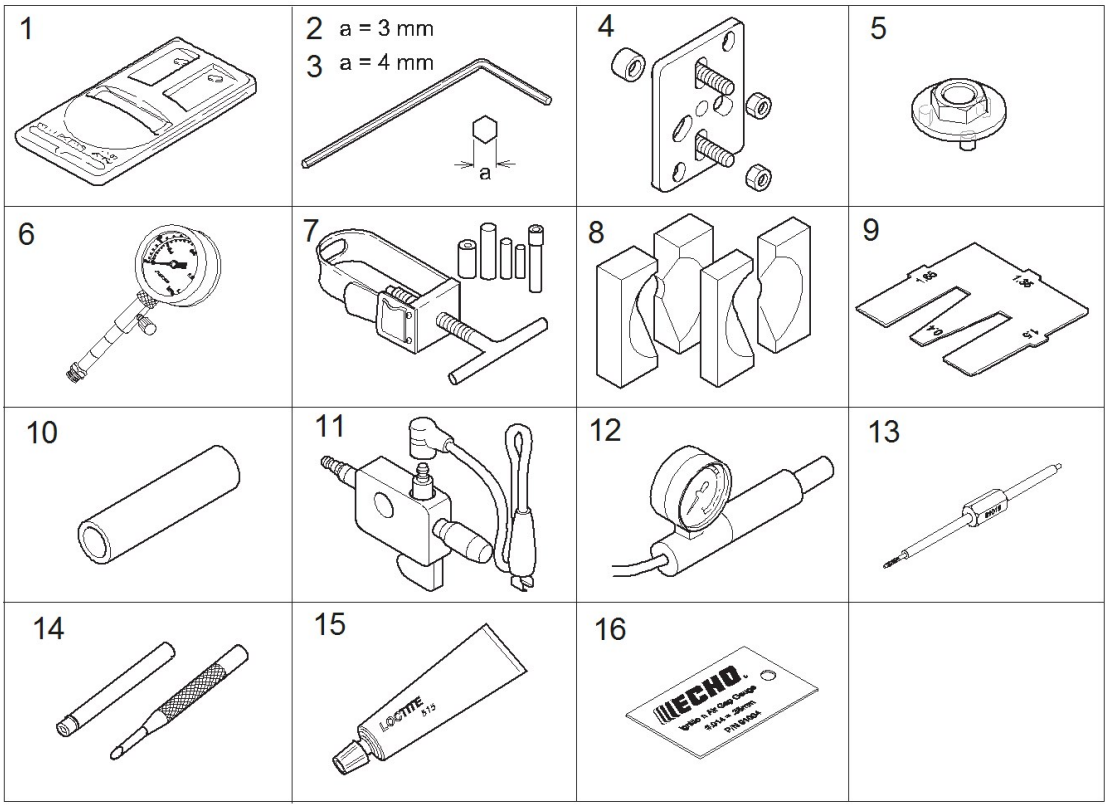

Copyright YAMABIKO EUROPE SA

Illustration special tools

Nummer	Antal	Kode	Beskrivelse	Vedhæftet fil	Recommended Stock Item	Remark
1		PET1000R	TACHOMETER			
2		WAX605000180	TOOL,L WRENCH			
3		WA89561079920	L-WRENCH (4MM)			
4		WA89750103938	Puller, Magneto			
5		WA89750516133	TOOL CLUTCH			
6		WA91037	COMPRESSION GAUGE			
7		WA89770230131	TOOL, PISTON PIN			
8		WA89770106030	BEARING WEDGE			
9		WA89756319830	GAUGE,METERING LEVER			
10		WA89772609130	OIL SEAL TOOL			
11		WA89780079931	TESTER SPARK			
12		WA89780330133	PRESSURE TESTER			
13		WA91019	LIMITER CAP TOOL			
14		WA500500	WELCH PLUG TOOL			
15		36888888	HONDA GX-160 ENGINE			
16		WA91004	IGNIT. AIR GAP GAUGE			

Copyright YAMABIKO EUROPE SA

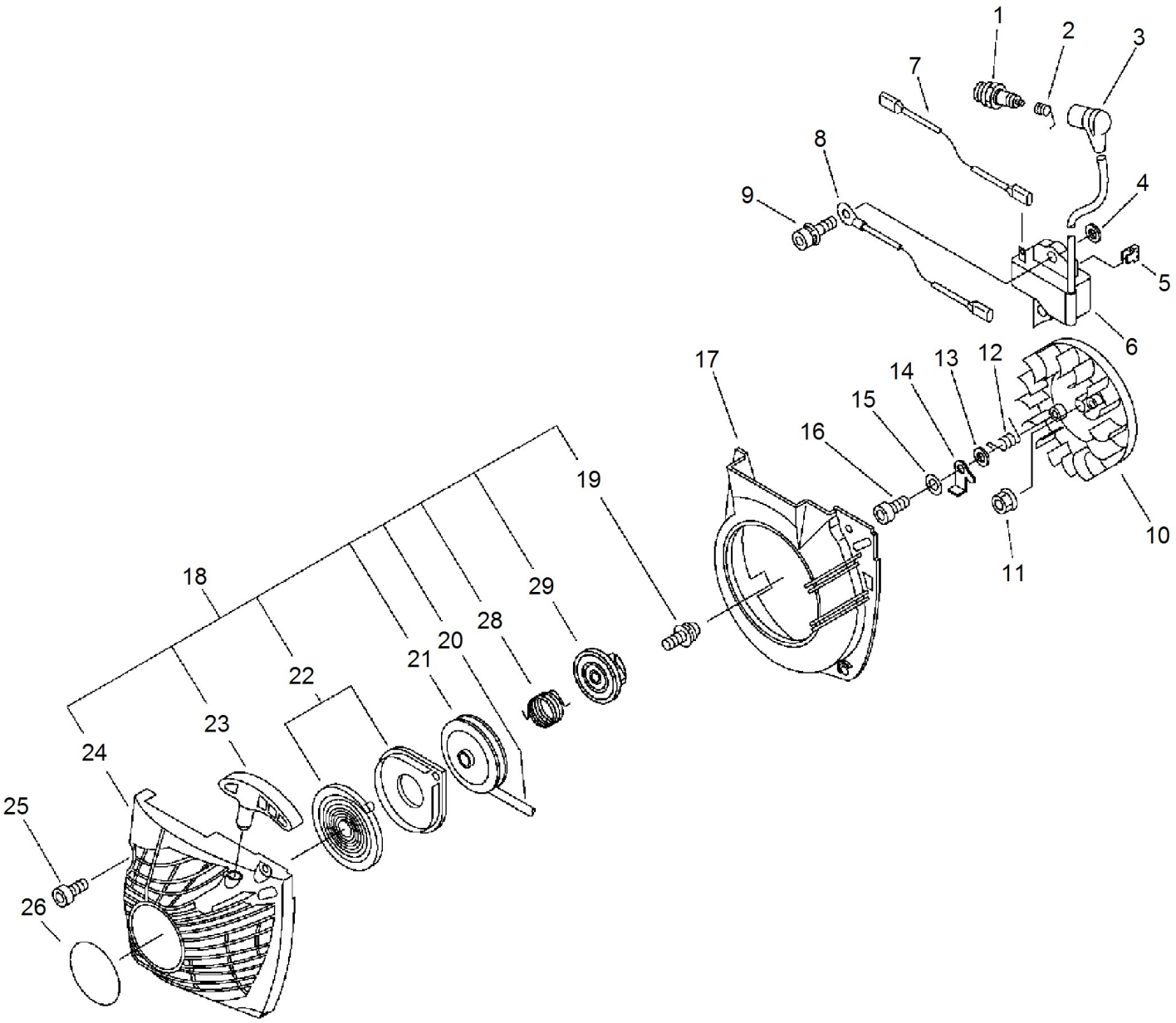

Copyright YAMABIKO EUROPE SA

Illustration starter, ignition

Nummer	Antal	Kode	Beskrivelse	Vedhæftet fil	Recommended Stock Item	Remark
1	1	A425000000	SPARKPLUG			Fast-moving
2	1	A426000010	TERMINAL,SPARKPLUG			Slow-moving
3	1	A427000013	CAP,SPARK PLUG	2008-372		Slow-moving
4	2	15011716430	SPACER			Slow-moving
5	1	V490000310	CLIP			Slow-moving
6	1	A411000264	COIL, IGNITION			Slow-moving
7	1	V485000680	lead			Slow-moving
8	1	V485000620	lead			Slow-moving
9	2	90016205020	BOLT HSH			
10	1	A409000272	ROTOR, MAGNETO			Slow-moving
11	1	90051500008	NUT, FLANGE			
12	2	17723435430	SPRING, RETURN			Medium-moving
13	2	17724704630	SPACER, RATCHET			Slow-moving
14	2	A514000050	PAWL			Slow-moving
15	2	90060300005	WASHER 5			
16	2	V203000090	BOLT,5			Slow-moving
17	1	A172000572	COVER,FAN	2009-401		Slow-moving
18	1	A051000981	STARTER,RECOIL ASY	2009-401		Medium-moving
19	1	17723661830	SCREW			
20	1	P022008440	ROPE, STARTER			Medium-moving
21	1	A506000080	REEL,ROPE	Y2011-481		Slow-moving
22	1	P022010440	SPRING KIT, REWIND			Medium-moving
23	1	P022005890	GRIP, STARTER			Slow-moving
24	1	A500000421	CASE, STARTER			Slow-moving
25	4	9114505020	BOLT HS TAPPING	Y2014-549		
26	1	X502000410	LABEL,ECHO			Slow-moving
28	1	V452000220	SPRING,TORSION	Y2011-481		Medium-moving
29	1	A507000021	CATCHER,PAWL			Slow-moving

Copyright YAMABIKO EUROPE SA