CS-352ES (-37004651)



Dokumenter

Carburettor WT-991

chain brake, clutch

Cutting set, accessories

Engine

GRIP, HANDLE

housing, air filter

Lable

MUFFLER

special tools

Starter, ignition from serial no.: 37003631

Starter, ignition up to serial number: 37003630

tool, claw

Copyright YAMABIKO EUROPE SA

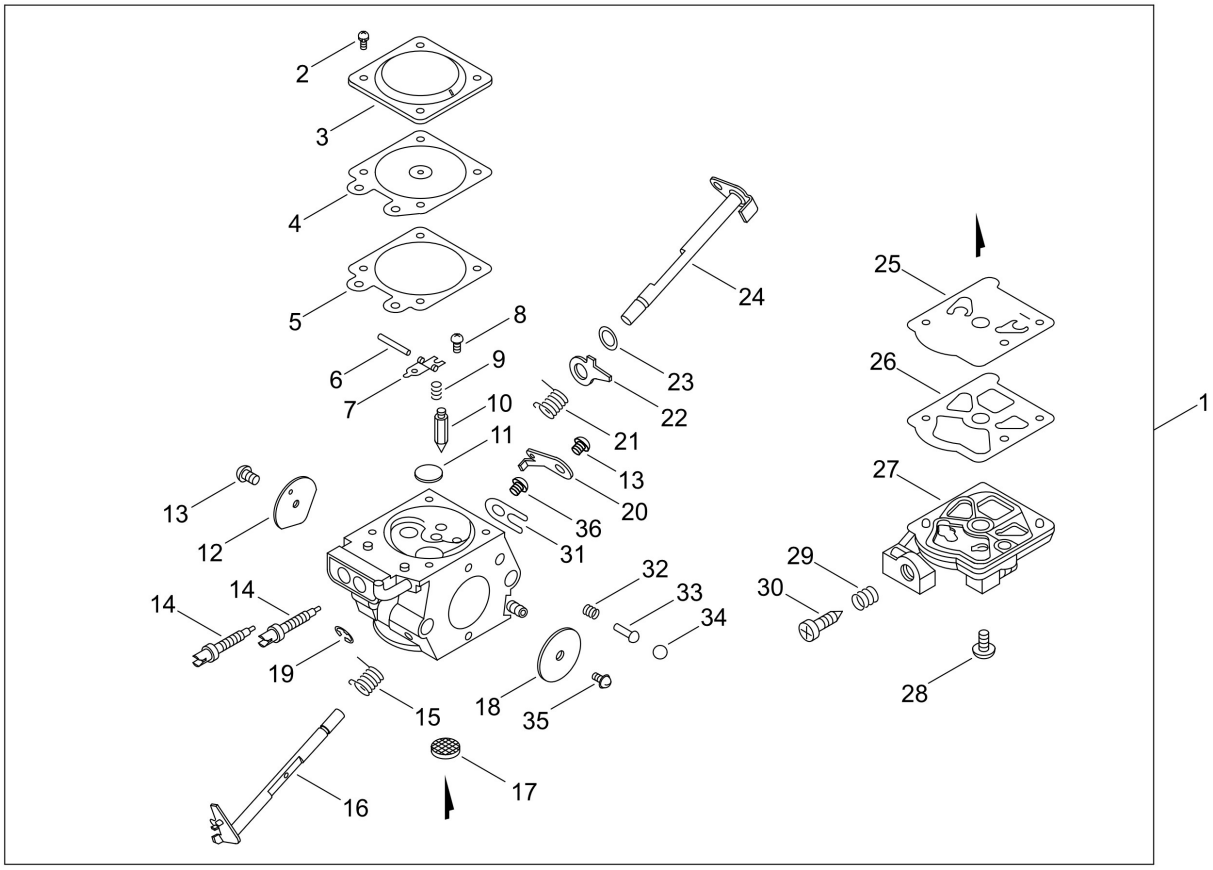

Copyright YAMABIKO EUROPE SA

Illustration Carburettor WT-991

Nummer	Antal	Kode	Beskrivelse	Vedhæftet fil	Recommended Stock Item	Remark
1	1	A021003342	Carburettor WT-991, CS-352ES			Medium-moving
2	4	12313002960	SCREW			Slow-moving
3	1	12314203930	COVER, M. DIAPHRAGM			Slow-moving
4	1	P003001850	DIAPHRAGM, METERING			Fast-moving
5	1	12314003930	GASKET, M. DIAPHRAGM			Fast-moving
6	1	12313803930	PIN, METERING LEVER			Slow-moving
7	1	12312303930	LEVER, METERING			Slow-moving
8	1	12313903930	SCREW, M. LEVER PIN			Slow-moving
9	1	12312203660	SPRING, METER. LEVER			Slow-moving
10	1	12313719830	VALVE, INLET NEEDLE			Slow-moving
11	1	12314610631	PLUG, WELCH			Slow-moving
12	1	P003002250	VALVE, CHOKE			Slow-moving
13	2	12311438830	SCREW			Slow-moving
14	2	P003004170	LEVER, CHOKE			Slow-moving
15	1	12311337530	SPRING, THROTTLE RTN			Medium-moving
16	1	P003002240	SHAFT ASY,THROTTLE			Slow-moving
17	1	12312610631	SCREEN, INLET			Medium-moving
18	1	12311623230	shutter, throttle			Slow-moving
19	1	12312715030	RING			Slow-moving
20	1	P003001040	LEVER THROTTLE			Slow-moving
21	1	P003002260	SPRING			Slow-moving
22	1	P003001510	LEVER-FAST IDLE			Slow-moving
23	1	12314926030	WASHER			Slow-moving
24	1	P003000150	CHOKE, SHAFT			
25	1	12311215030	DIAPHRAGM, FUEL PUMP			Fast-moving
26	1	12312515030	GASKET, FUEL PUMP			Fast-moving
27	1	12312409520	COVER, FUEL PUMP			Slow-moving
28	1	12311003930	SCREW, PUMP COVER			Slow-moving
29	1	12313304260	SPRING, IDLE ADJUST			Slow-moving
30	1	12313404260	SCREW, IDLE ADJUST			Slow-moving
31	1	12312703930	CLIP, THROTTLE SHAFT			Slow-moving
32	1	12318609660	SPRING, START VALVE			Slow-moving
33	1	12318509660	PISTON ASSY			Slow-moving
34	1	12313609660	BALL			Slow-moving
35	1	P003002380	SCREW			Slow-moving
36	1	P003005120	SCREW			Slow-moving

Copyright YAMABIKO EUROPE SA

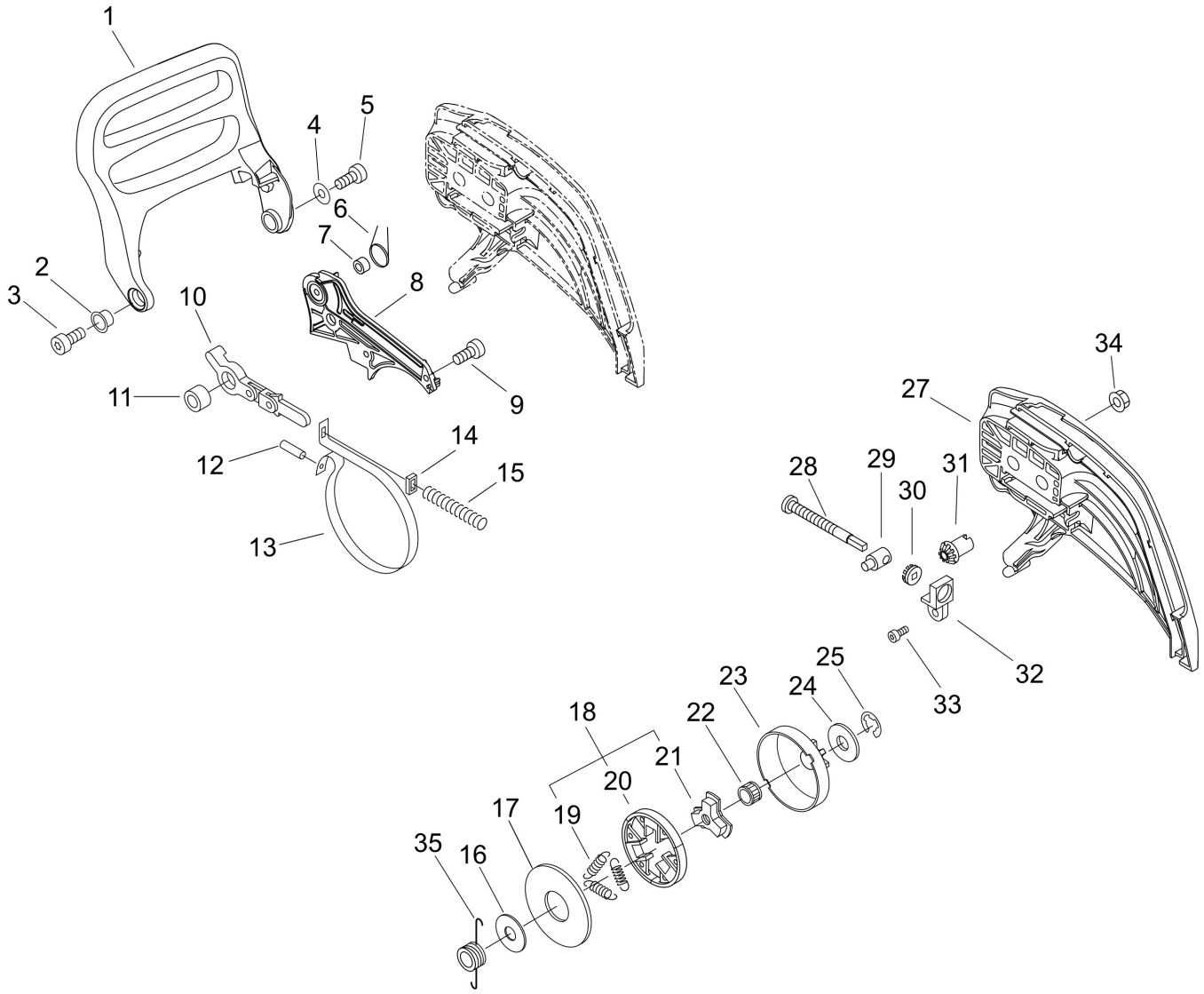

Copyright YAMABIKO EUROPE SA

Illustration chain brake, clutch

Nummer	Antal	Kode	Beskrivelse	Vedhæftet fil	Recommended Stock Item	Remark
1	1	C320000171	LEVER, BRAKE			Slow-moving
2	1	V356000430	COLLAR,10			Slow-moving
3	1	V805000010	BOLT, TORX 5			Slow-moving
4	1	17721403930	WASHER			Slow-moving
5	1	V804000020	BOLT, TORX 4			Slow-moving
6	1	V452000250	SPRING,TORSION			Medium-moving
7	1	43311635430	SPACER 8			Slow-moving
8	1	C345000271	COVER, BRAKE			Slow-moving
9	3	V804000000	BOLT, TORX 4			Slow-moving
10	1	C334000100	CONNECTOR, BRAKE			Slow-moving
11	1	43311635430	SPACER 8			Slow-moving
12	1	9305030098	ROLLER			
13	1	C328000030	BAND,BRAKE			Slow-moving
14	1	V376000450	SPACER			Slow-moving
15	1	V450000070	SPRING,COMPRESSION			Medium-moving
16	1	A551000080	PLATE, CLUTCH			Slow-moving
17	1	A551000140	PLATE,CLUTCH			Slow-moving
18	1	A056000210	CLUTCH ASY			Medium-moving
19	3	V451000470	SPRING,TENSION			Medium-moving
20	1	P021005810	CLUTCH SHOE SET			Medium-moving
21	1	A552000100	HUB, CLUTCH			Medium-moving
22	1	V553000150	BEARING, NEEDLE	Y2015-568		Medium-moving
23	1	A556000542	DRUM,CLUTCH			Medium-moving
24	1	10014319830	WASHER			Slow-moving
25	1	V583000120	RING			Slow-moving
27	1	C300000401	GUARD, SPROCKET			Slow-moving
28	1	V203000110	BOLT,5			Slow-moving
29	1	C309000030	TENSIONER,CHAIN			Slow-moving
30	1	V651000011	GEAR,BEVEL			Slow-moving
31	1	V651000001	GEAR,BEVEL			Slow-moving
32	1	V355000140	COLLAR,8			Slow-moving
33	1	V804000000	BOLT, TORX 4			Slow-moving
34	2	43301912330	NUT, FLANGE 8			Slow-moving
35	1	V652000040	GEAR,WORM			Medium-moving

Copyright YAMABIKO EUROPE SA

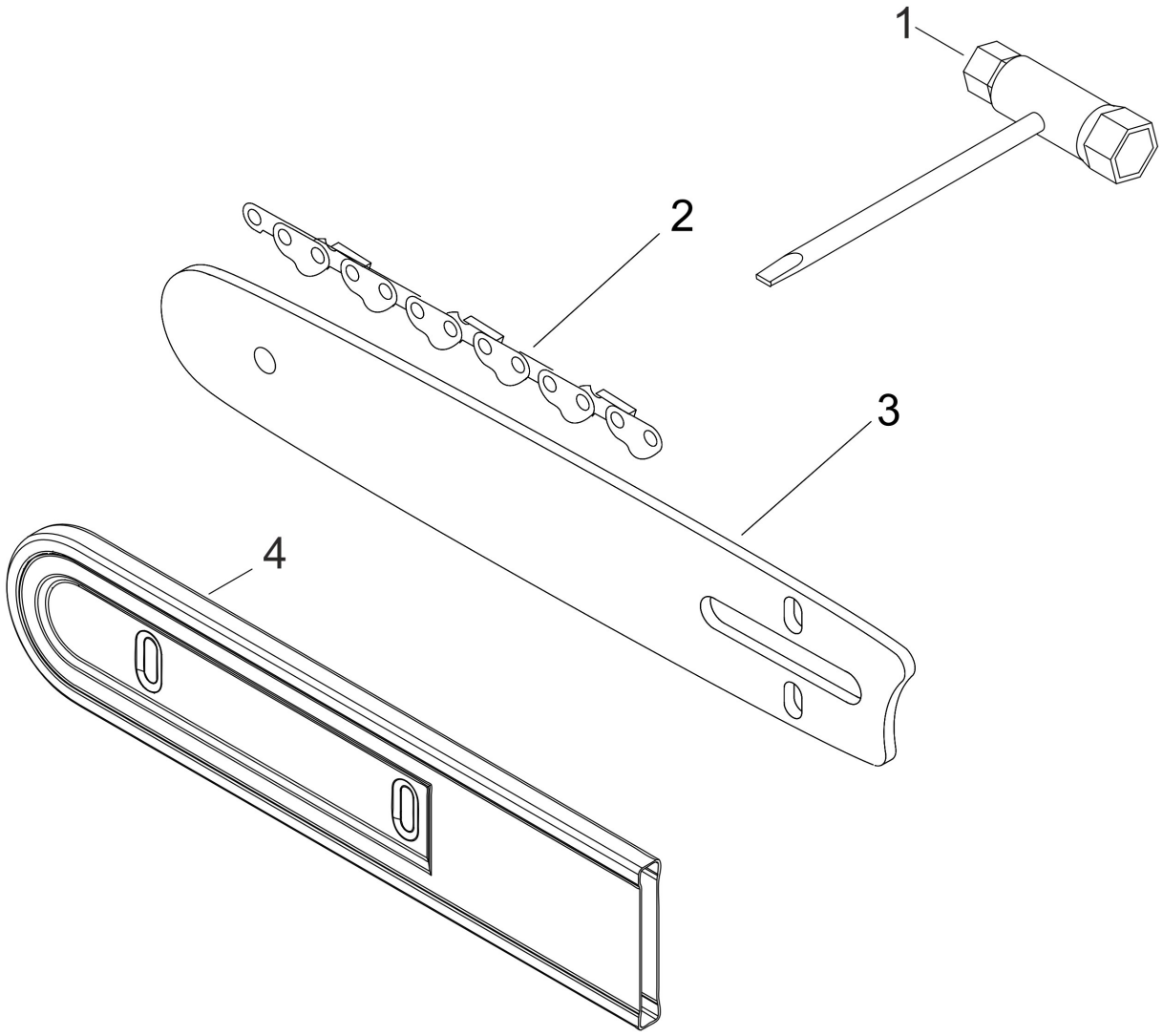

Copyright YAMABIKO EUROPE SA

Illustration Cutting set, accessories

Nummer	Antal	Kode	Beskrivelse	Vedhæftet fil	Recommended Stock Item	Remark
1	1	X602000080	TOOL,WRENCH			Slow-moving
2	1	KE30133847	Saw chain, 30 cm 47 drive links, pitch 3/8"H			
2	1	KE35133853	Saw chain, 35 cm 53 drive links, pitch 3/8"H			
3	1	S30RC503/8	Bar for Chain Saw X122-000071			
3	1	S35RC503/8	Bar for Chain Saw			
4	1	X490000510	SCABBARD,CHAIN			Slow-moving

Copyright YAMABIKO EUROPE SA

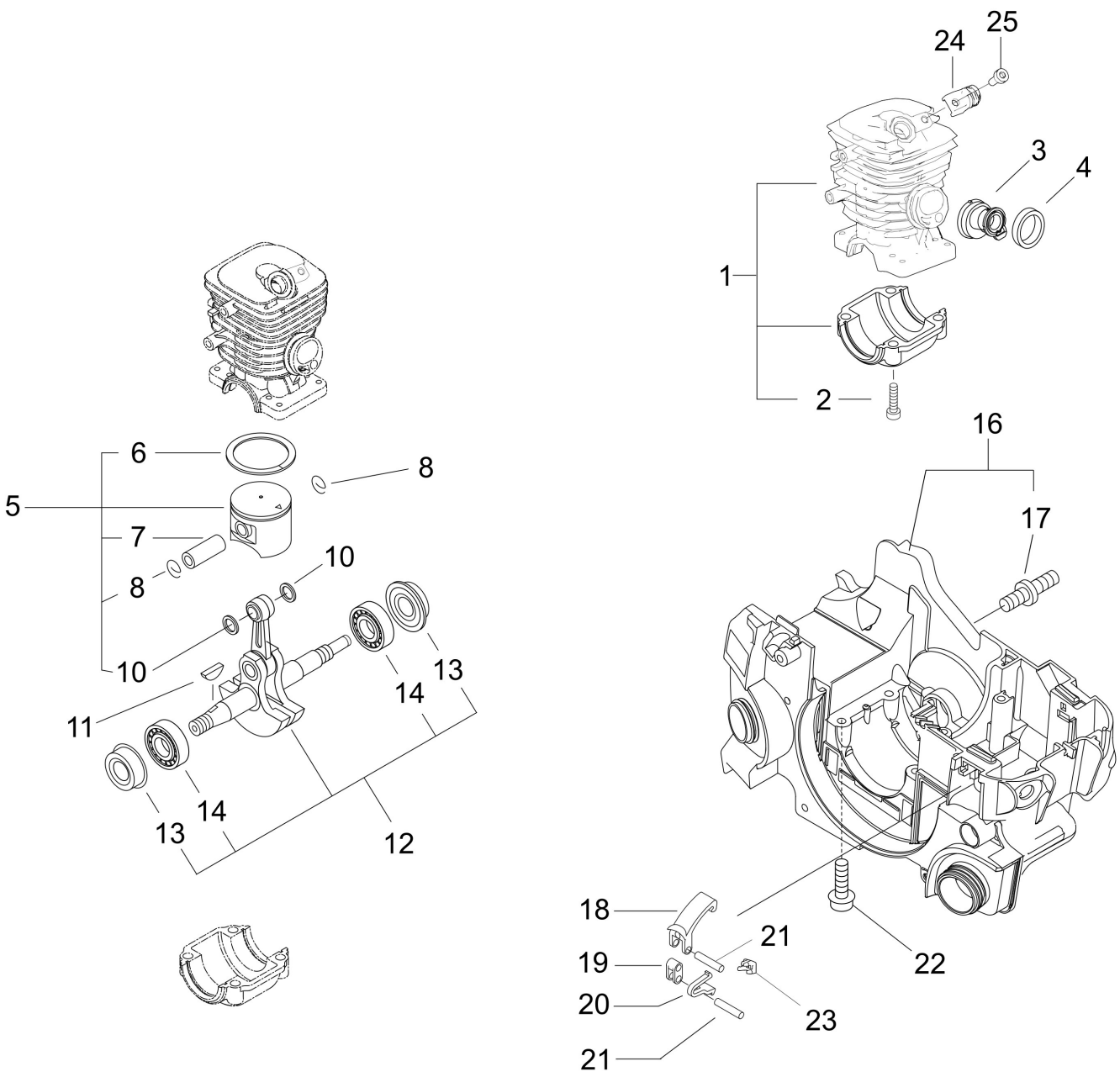

Copyright YAMABIKO EUROPE SA

Nummer	Antal	Kode	Beskrivelse	Vedhæftet fil	Recommended Stock Item	Remark
1	1	P021035190	CRANKCASE KIT			Slow-moving
2	4	V805000220	BOLT, TORX 5			Slow-moving
3	1	A202000070	BELLOWS, INTAKE	Y2012-495		Slow-moving
4	1	A206000000	HOLDER, BELLOWS			Slow-moving
5	1	P021035200	PISTON, KIT			Slow-moving
6	1	A101000580	RING, PISTON			Medium-moving
7	1	10001315330	PIN, PISTON			Slow-moving
8	2	10001504630	CIRCLIP, PISTON PIN			Slow-moving
10	2	10001411520	SPACER, PISTON PIN			Slow-moving
11	1	10014212330	KEY, WOODRUFF			Slow-moving
12	1	P021015072	CRANKSHAFT,ASSY			Slow-moving
13	2	V505000011	SEAL,OIL 12			Slow-moving
14	2	9403536201	BEARING BALL			
16	1	P021036934	COVER, ENGINE			
17	2	V225000030	BOLT,STUD 8	Y2014-552		Slow-moving
18	2	C463000030	KNOB, LATCH			Slow-moving
19	2	J485000200	HINGE			Slow-moving
20	2	V490000400	CLIP			Slow-moving
21	4	V622000070	PIN, STRAIGHT 4			Slow-moving
22	4	V805000180	BOLT, TORX 5			Slow-moving
23	2	C617000500	STOPPER			Slow-moving
24	1	V456000240	HOLDER,SPRING			Slow-moving
25	1	V805000140	BOLT, TORX 5			Slow-moving

Copyright YAMABIKO EUROPE SA

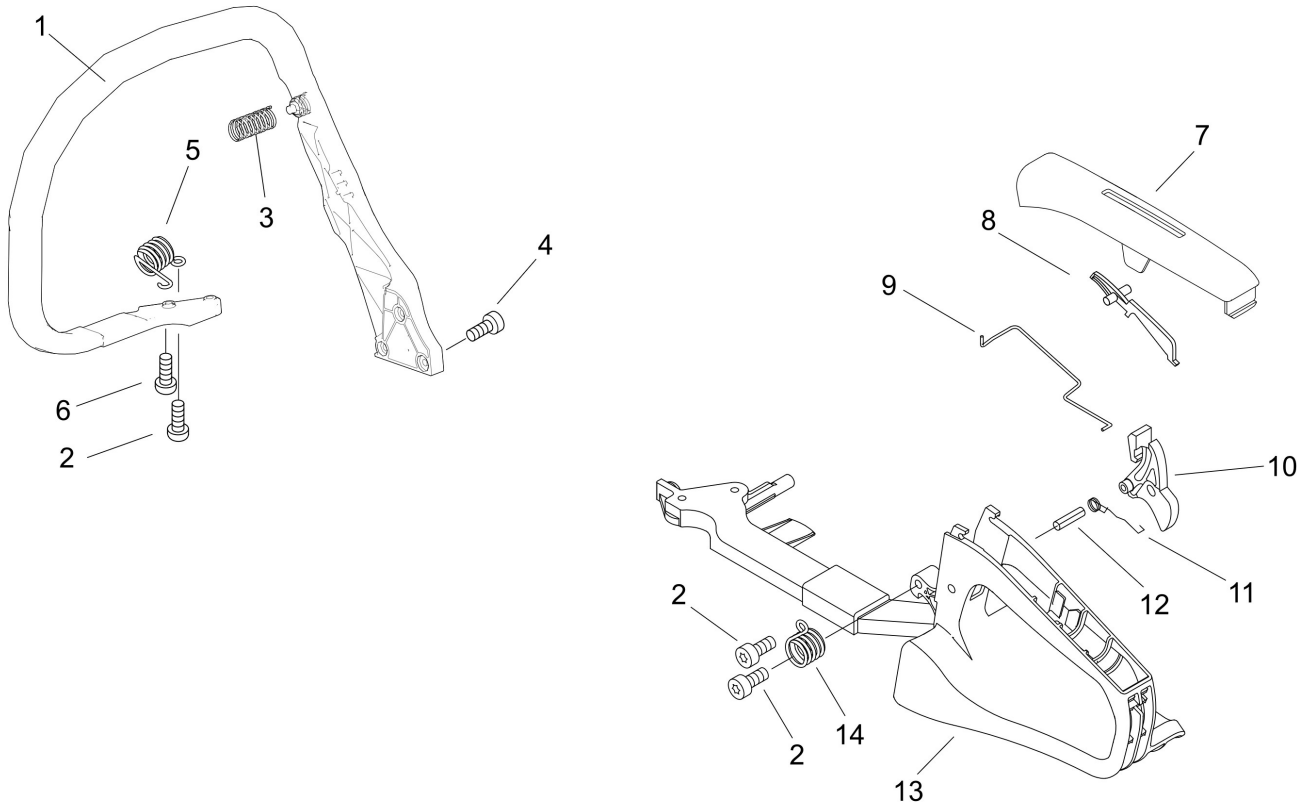

Copyright YAMABIKO EUROPE SA

Illustration GRIP, HANDLE

Nummer	Antal	Kode	Beskrivelse	Vedhæftet fil	Recommended Stock Item	Remark
1	1	C400001030	HANDLE, FRONT			Slow-moving
2	3	V805000000	BOLT, TORX 5			Slow-moving
3	1	V450001610	SPRING, COMPRESSION			Medium-moving
4	3	V805000010	BOLT, TORX 5			Slow-moving
5	1	V450000710	SPRING,COMPRESSION			Medium-moving
6	2	V805000000	BOLT, TORX 5			Slow-moving
7	1	C411000040	LID, HANDLE			Slow-moving
8	1	C460000072	LOCKOUT, THROTTLE			Slow-moving
9	1	C454000160	ROD, THROTTLE			Slow-moving
10	1	C450000212	CONTROL, THROTTLE			Slow-moving
11	1	V452000260	SPRING,TORSION			Medium-moving
12	1	90034540025	PIN, SPRING 4*25			
13	1	C410000450	HANDLE, REAR			Slow-moving
14	1	V450001620	SPRING, COMPRESSION			Medium-moving

Copyright YAMABIKO EUROPE SA

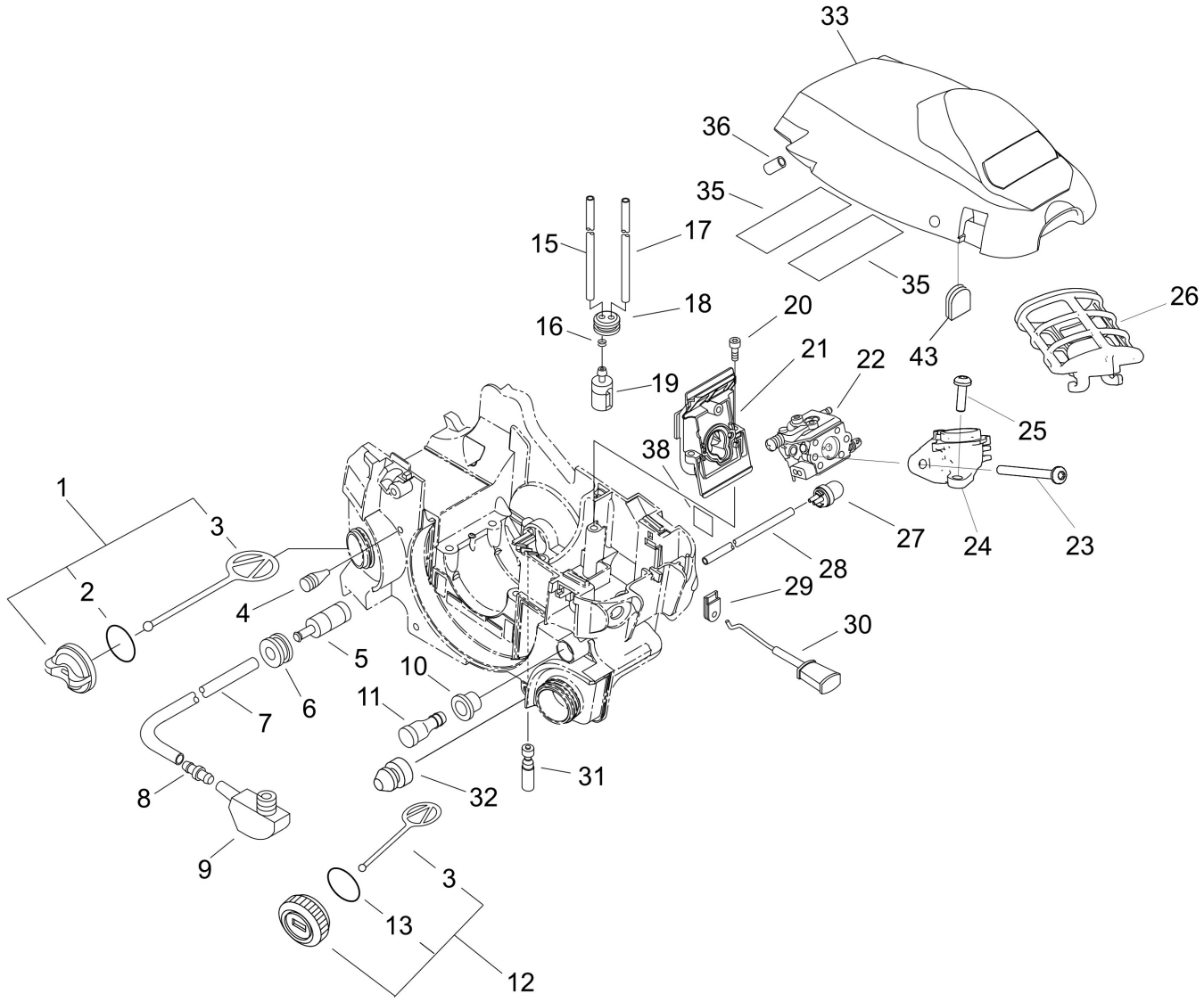

Copyright YAMABIKO EUROPE SA

Illustration housing, air filter

Nummer	Antal	Kode	Beskrivelse	Vedhæftet fil	Recommended Stock Item	Remark
1	1	P021005581	CAP ASY			Slow-moving
2	1	90072000018	O-RING			Fast-moving
3	1	A365000050	CONNECTOR,CAP			Medium-moving
4	1	43611413930	VALVE, CHECK			Medium-moving
5	1	43620502832	STRAINER, OIL			
6	1	13211501461	GROMMET			Slow-moving
7	1	13011005260	PIPE, IMPULSE			Slow-moving
8	1	V186000020	JOINT,PIPE			Slow-moving
9	1	V470000810	PIPE			Slow-moving
10	1	V137000000	GROMMET,FUEL			Slow-moving
11	1	A356000030	VALVE,CHECK			Medium-moving
12	1	13100437932	CAP ASSY FUEL TANK			
13	1	90072000022	O-RING 22			
15	1	V471002170	PIPE			Slow-moving
16	1	13201309820	CLIP			Slow-moving
17	1	V471001560	PIPE			Slow-moving
18	1	13211544330	GROMMET			Slow-moving
19	1	13120514930	STRAINER,FUEL	Y2021-700		Fast-moving
20	2	V805000010	BOLT, TORX 5			Slow-moving
21	1	A200000352	INSULATOR, INTAKE	Y2012-495		Slow-moving
22	1	A021003340	CARBURETOR, DIAPHRAGM			Medium-moving
23	2	V805000040	BOLT, TORX 5			Slow-moving
24	1	A204000211	ELBOW, CARBURETOR			Slow-moving
25	1	V805000000	BOLT, TORX 5			Slow-moving
26	1	A226001420	ELEMENT, AIR FILTER			Fast-moving
27	1	12318139130	PUMP, FUEL			Fast-moving
28	1	V471001280	PIPE			Slow-moving
29	1	V130000010	GROMMET,CHOKE			Slow-moving
30	1	A241000150	KNOB, CHOKE			Slow-moving
31	1	C022000071	AUTO-OILER ASSEMBLY	Y2013-520		Slow-moving
32	2	V420001790	CUSHION			Medium-moving
33	1	A160002300	COVER, CYLINDER			Slow-moving
35	2	V341000120	WASHER,SQUARE			Slow-moving
36	1	10092735830	PIPE 3* 7* 10			Slow-moving
43	1	13033832430	PLUG, COVER			Medium-moving
11	1	A356000030	VALVE,CHECK			Medium-moving
38	1	X524001900	LABEL			Slow-moving

Copyright YAMABIKO EUROPE SA

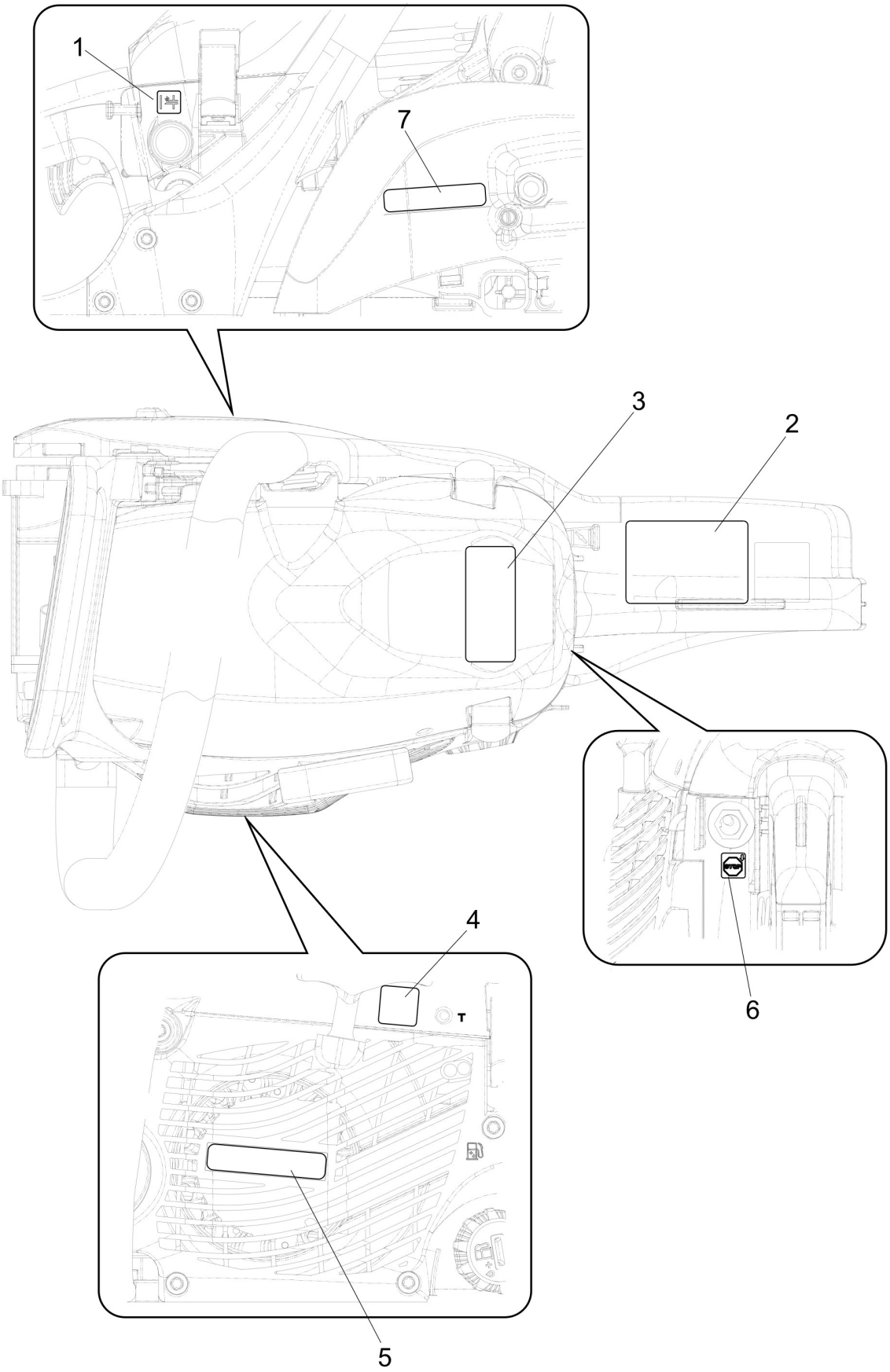

Copyright YAMABIKO EUROPE SA

Illustration Lable

Nummer	Antal	Kode	Beskrivelse	Vedhæftet fil	Recommended Stock Item	Remark
1	1	X524001900	LABEL			Slow-moving
2	1	X505006220	LABEL, CAUTION			D
3	1	X503010410	LABEL, MODEL			Slow-moving
4	1	89063138130	LABEL, CAUTION			Slow-moving
5	1	X502000670	LABEL, ECHO			Slow-moving
6	1	89015739130	LABEL, SWITCH			Slow-moving
7	1	X502000340	LABEL,ECHO			Slow-moving

Copyright YAMABIKO EUROPE SA

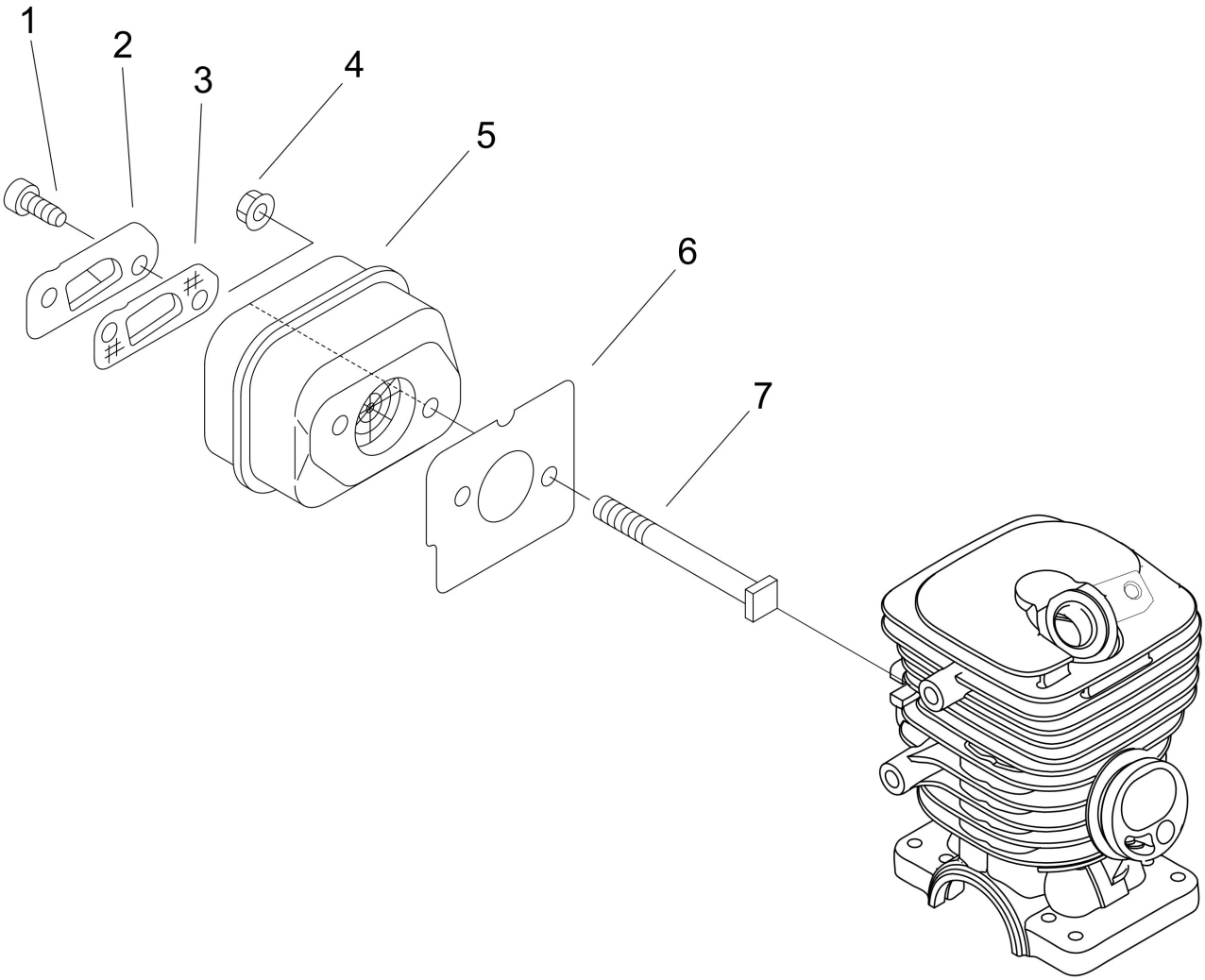

Copyright YAMABIKO EUROPE SA

Illustration MUFFLER

Nummer	Antal	Kode	Beskrivelse	Vedhæftet fil	Recommended Stock Item	Remark
1	2	V804000030	BOLT, TORX 4			Slow-moving
2	1	A313001120	GUIDE, EXHAUST			Slow-moving
3	1	A310000060	SCREEN, ARRESTOR			Medium-moving
4	2	90051600005	NUT, FRANGE 5			
5	1	A300000830	MUFFLER, EXHAUST			Slow-moving
6	1	V104000731	GASKET,EXHAUST			Fast-moving
7	2	V203000120	BOLT,5			Slow-moving

Copyright YAMABIKO EUROPE SA

Spezialwerkzeuge

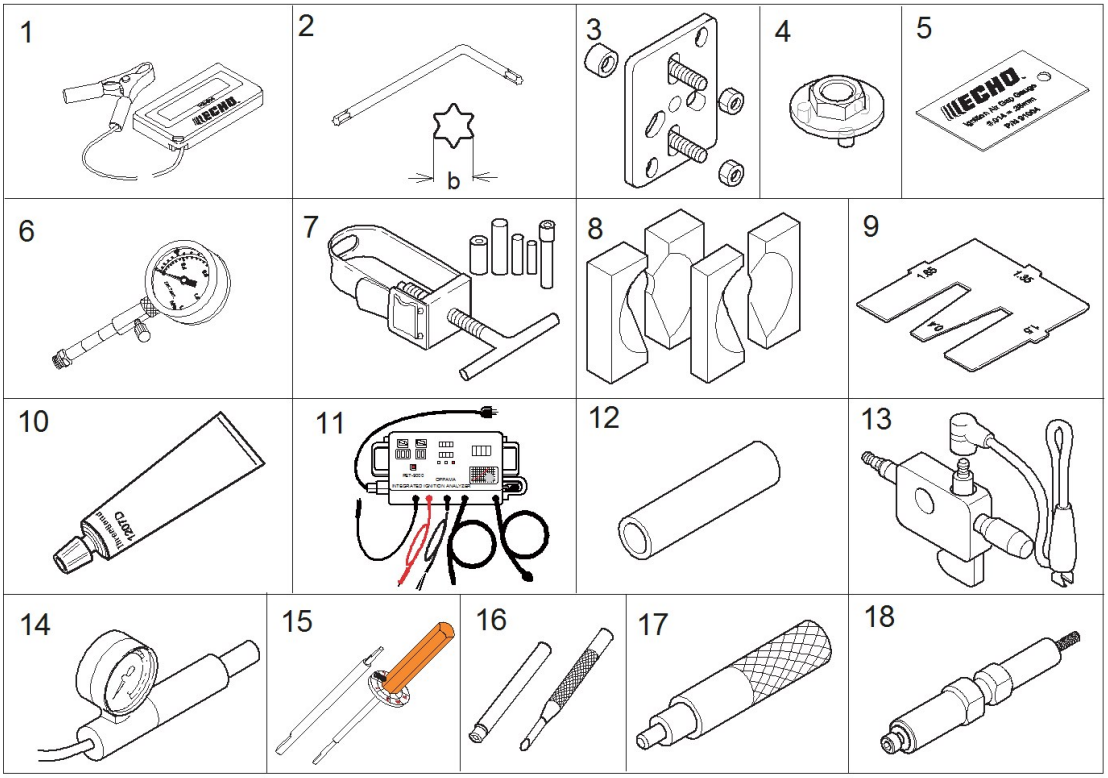

Copyright YAMABIKO EUROPE SA

Illustration special tools

Nummer	Antal	Kode	Beskrivelse	Vedhæftet fil	Recommended Stock Item	Remark
1		PET1000R	TACHOMETER			
2		WAX605000170	TOOL, L WRENCH			
3		WA89750103938	Puller, Magneto			
4		WA89750516133	TOOL CLUTCH			
5		WA91004	IGNIT. AIR GAP GAUGE			
6		WA91037	COMPRESSION GAUGE			
7		WA89770230131	TOOL, PISTON PIN			
8		WA89770106030	BEARING WEDGE			
9		WA89756319830	GAUGE,METERING LEVER			
10		WAX686000000	GASKET,LIQUID			
11		PET9000	Ignition Analyzer : PET-9000			
12		WA89772621430	OIL SEAL TOOL			
13		WA89780079931	TESTER SPARK			
14		WA89780330133	PRESSURE TESTER			
15		WAY089000090	TOOL,KIT			
16		WA500500	WELCH PLUG TOOL			
17		WA91073	OILER INSTALLER			
18		WAY089000130	TOOL, KIT			

Copyright YAMABIKO EUROPE SA

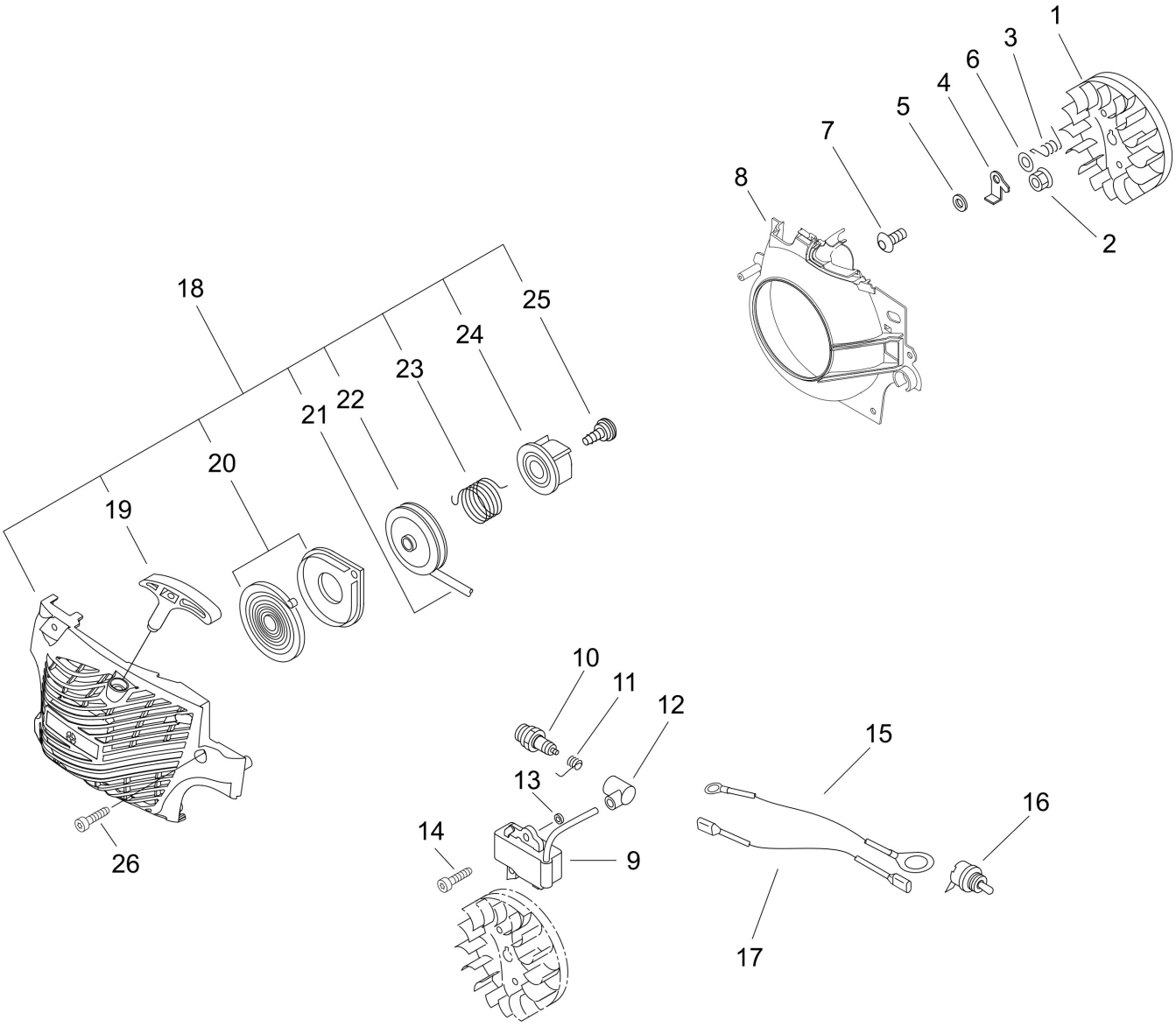

Copyright YAMABIKO EUROPE SA

Illustration Starter, ignition from serial no.: 37003631

Nummer	Antal	Kode	Beskrivelse	Vedhæftet fil	Recommended Stock Item	Remark
1	1	A409000350	ROTOR, MAGNETO			Slow-moving
2	1	90051500008	NUT, FLANGE 8			
3	2	17723435430	SPRING, RETURN			Medium-moving
4	2	A514000020	PAWL			Slow-moving
5	2	17724704630	SPACER, RATCHET			Slow-moving
6	2	90060300005	WASHER 5			
7	2	V203000080	BOLT,5			Slow-moving
8	1	A172000830	COVER,FAN			Slow-moving
9	1	A411001180	COIL, IGNITION			Slow-moving
10	1	A425000000	SPARKPLUG			Fast-moving
11	1	A426000020	TERMINAL,SPARKPLUG			Slow-moving
12	1	A427000020	CAP,SPARK PLUG			Slow-moving
13	2	15011716430	SPACER			Slow-moving
14	2	V805000210	BOLT, TORX 5			Slow-moving
15	1	V485001070	LEAD			Slow-moving
16	1	A440001190	SWITCH, ON OFF			Slow-moving
17	1	V485001080	LEAD			Slow-moving
18	1	A051001301	STARTER, RECOIL ASY	Y2011-481		Medium-moving
19	1	P022005891	GRIP, STARTER			Slow-moving
20	1	P022001330	SPRING KIT, REWIND			Medium-moving
21	1	P022008440	ROPE, STARTER			Medium-moving
22	1	A506000460	REEL,ROPE	Y2011-481		Slow-moving
23	1	V452001320	SPRING,TORSION	Y2011-481		Medium-moving
24	1	A507000110	CATCHER,PAWL	Y2011-481		Slow-moving
25	1	17723661830	SCREW			
26	4	V805000010	BOLT, TORX 5			Slow-moving

Copyright YAMABIKO EUROPE SA

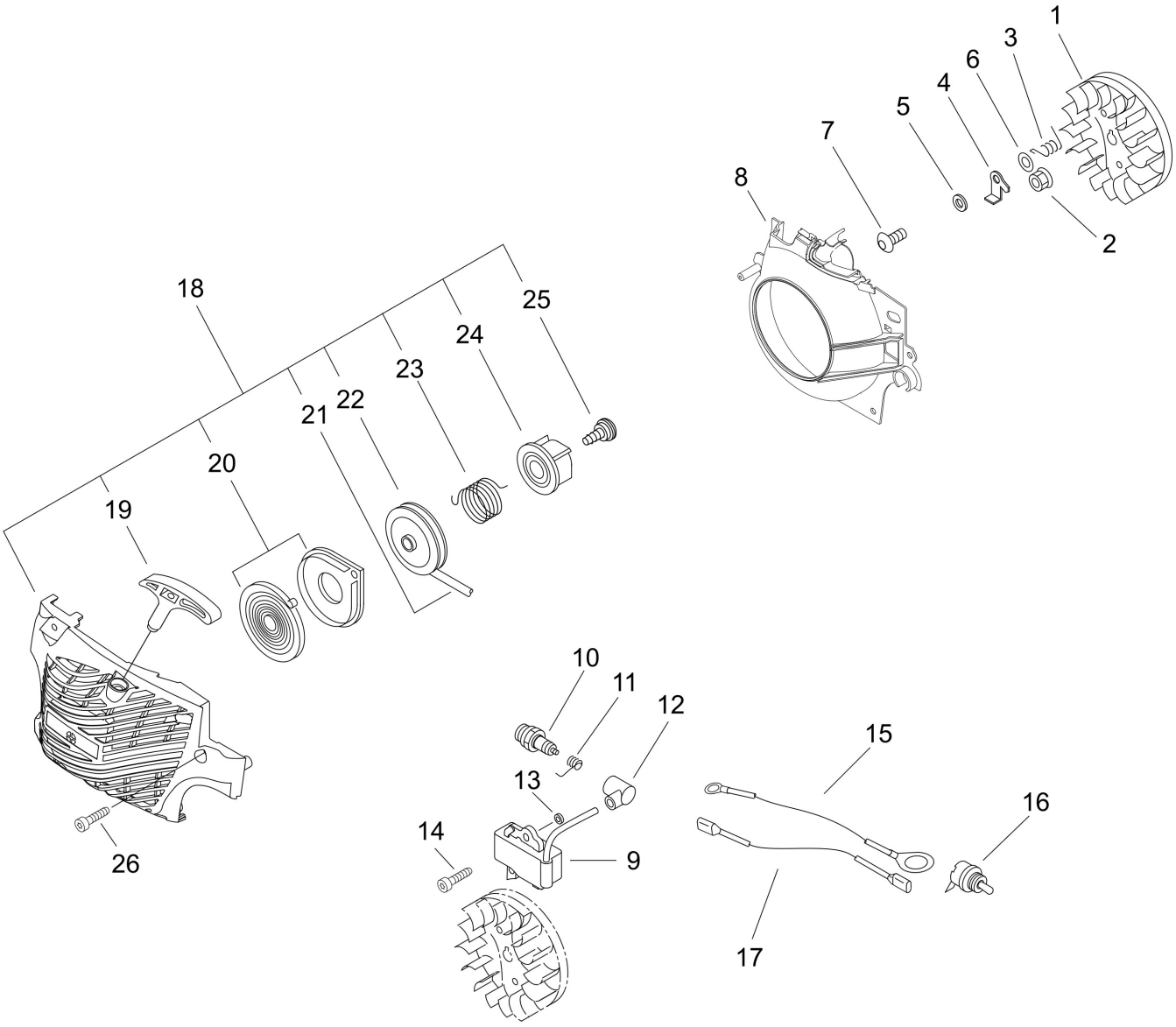

Copyright YAMABIKO EUROPE SA

Illustration Starter, ignition up to serial number: 37003630

Nummer	Antal	Kode	Beskrivelse	Vedhæftet fil	Recommended Stock Item	Remark
1	1	A409000350	ROTOR, MAGNETO			Slow-moving
2	1	90051500008	NUT, FLANGE 8			
3	2	17723435430	SPRING, RETURN			Medium-moving
4	2	A514000020	PAWL			Slow-moving
5	2	17724704630	SPACER, RATCHET			Slow-moving
6	2	90060300005	WASHER 5			
7	2	V203000080	BOLT,5			Slow-moving
8	1	A172000830	COVER,FAN			Slow-moving
9	1	A411001180	COIL, IGNITION			Slow-moving
10	1	A425000000	SPARKPLUG			Fast-moving
11	1	A426000020	TERMINAL,SPARKPLUG			Slow-moving
12	1	A427000020	CAP,SPARK PLUG			Slow-moving
13	2	15011716430	SPACER			Slow-moving
14	2	V805000210	BOLT, TORX 5			Slow-moving
15	1	V485001070	LEAD			Slow-moving
16	1	A440001190	SWITCH, ON OFF			Slow-moving
17	1	V485001080	LEAD			Slow-moving
18	1	A051001300	STARTER, RECOIL ASY	Y2011-481		Medium-moving
20	1	P022001330	SPRING KIT, REWIND			Medium-moving
21	1	P022008440	ROPE, STARTER			Medium-moving
22	1	A506000080	REEL,ROPE	Y2011-481		Slow-moving
23	1	V452000220	SPRING,TORSION	Y2011-481		Medium-moving
24	1	A507000021	CATCHER,PAWL			Slow-moving
25	1	17723661830	SCREW			
26	4	V805000010	BOLT, TORX 5			Slow-moving
19	1	P022005891	GRIP, STARTER			Slow-moving

Copyright YAMABIKO EUROPE SA

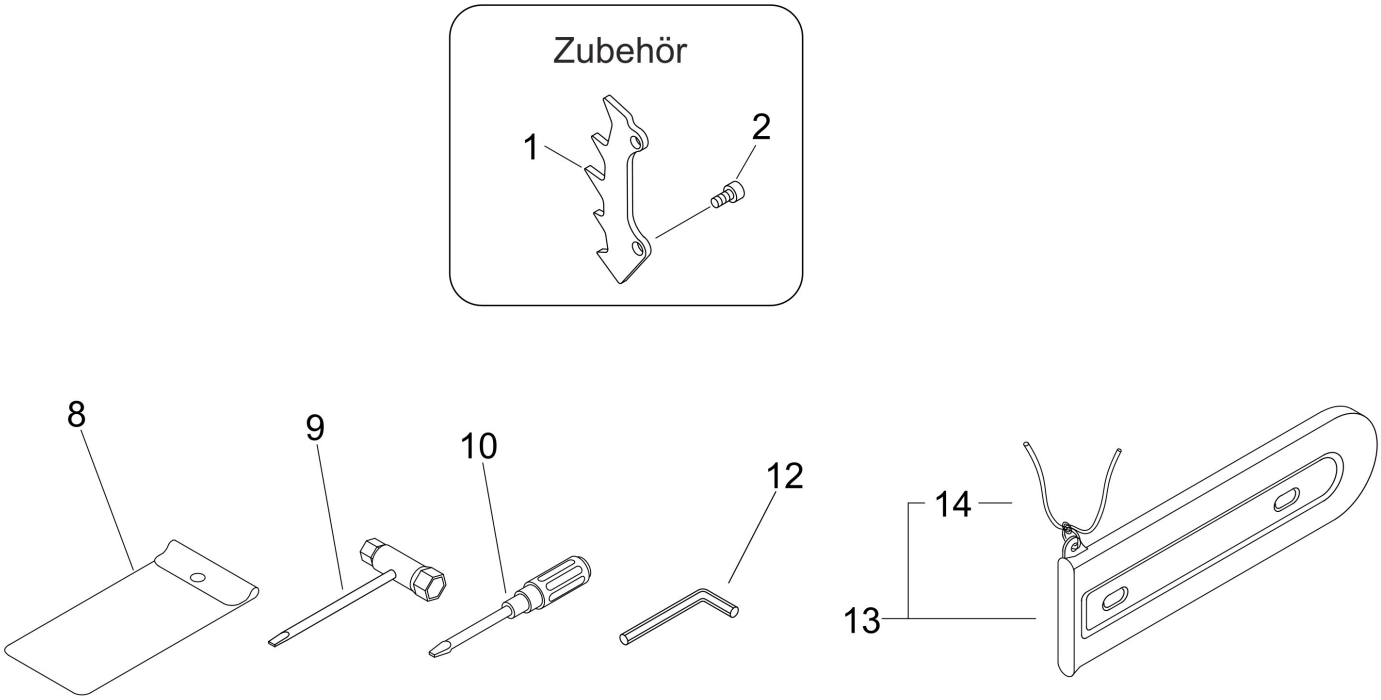

Copyright YAMABIKO EUROPE SA

Illustration tool, claw

Nummer	Antal	Kode	Beskrivelse	Vedhæftet fil	Recommended Stock Item	Remark
1	1	C304000010	SPIKED			Slow-moving
2	2	V805000010	BOLT, TORX 5			Slow-moving
8	1	89851039130	BAG, TOOL			
9	1	X602000080	TOOL,WRENCH			Slow-moving
10	1	89581203930	SCREWDRIVER 50			Slow-moving
12	1	X605000050	TOOL,L WRENCH			Slow-moving
13	1	P021006951	SCABBARD,CHAIN			
14	1	89856814530	ROPE			Medium-moving

Copyright YAMABIKO EUROPE SA