CS-3400



Dokumenter

air filter, exhaust

Carburettor WT385 to S.-Nr.: 007778

Carburettor WT385A from S.-Nr.: 007779 to 35999999

Carburettor WT-402A from S.-Nr.: 36000001

Clutch, cutting set, chain brake from S.-Nr.: 36000001

Clutch, cutting set, chain brake up to serial no.: 35999999

engine, housing

handles

Starter, ignition from serial no.: 025154

Starter, ignition up to serial number: 025153

tanks, oil pump

Copyright YAMABIKO EUROPE SA

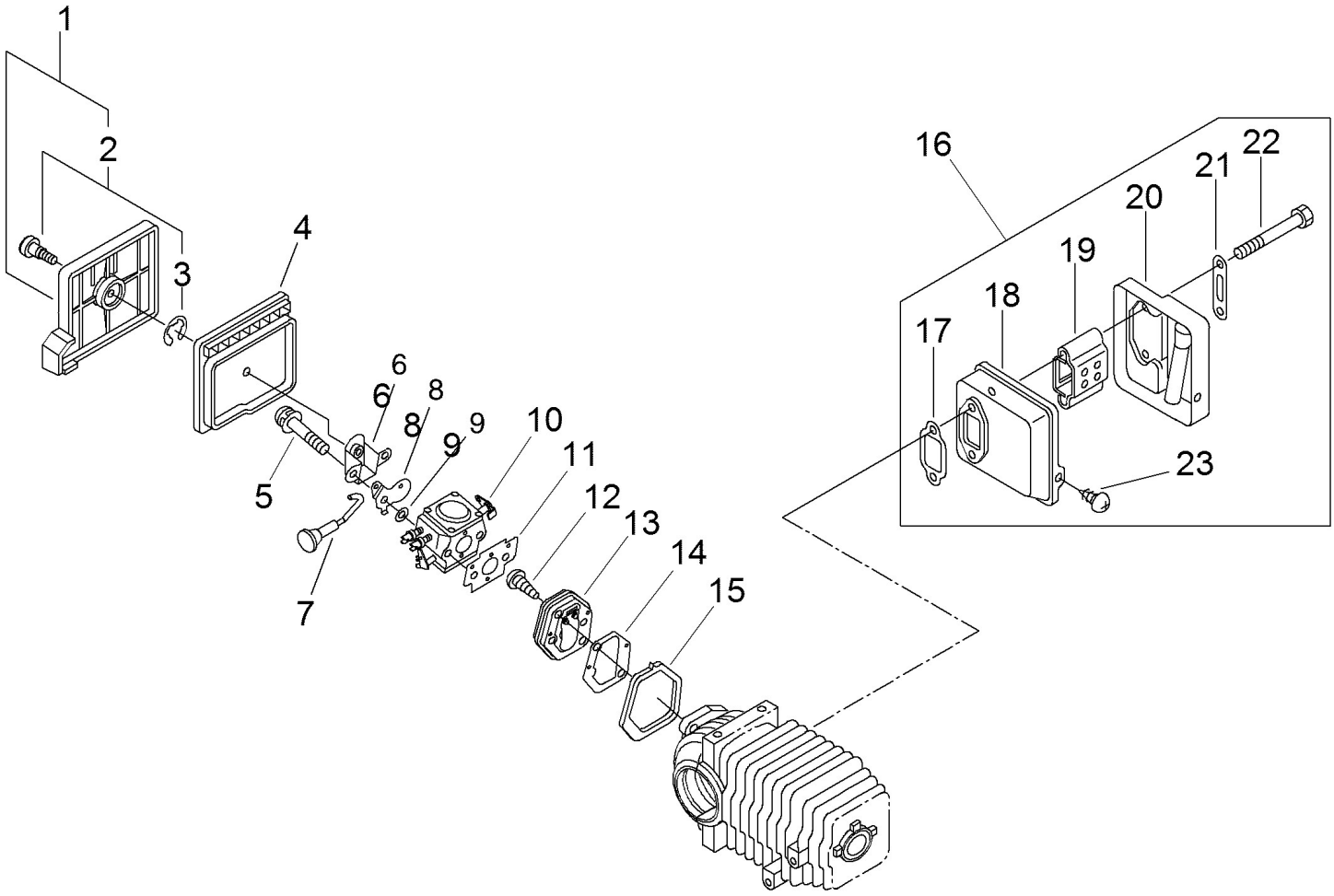

Copyright YAMABIKO EUROPE SA

Illustration air filter, exhaust

Nummer	Antal	Kode	Beskrivelse	Vedhæftet fil	Recommended Stock Item	Remark
1	1	13030239136	COVER ASY, A.CLEANER	2002-103		
2	1	13040613933	SCREW	2002-103		
3	1	90070000004	RETAINING RING			
4	1	13031039132	FILTER, AIR			Fast-moving
5	2	90023805045	BOLT			
6	1	12901139130	PLATE			Slow-moving
7	1	17851039130	ROD CHOKE			Slow-moving
8	1	17851539130	SHUTTER, CHOKE			Slow-moving
9	2	17851603930	WASHER			Slow-moving
10	1	12300139135	CARBURETOR			Medium-moving
11	1	13001639130	GASKET			Fast-moving
12	2	90025005018	SCREW 5x18			
13	1	P021000010	INSULATOR KIT			Slow-moving
14	1	13001039130	GASKET INTAKE			Fast-moving
15	1	13001239131	GASKET	2002-103		Slow-moving
16	1	14560014931	MUFFLER ASSY			
17	1	14551013931	GASKET, MUFFLER			Fast-moving
18	1	14585813931	MUFFLER			Slow-moving
19	1	14585913930	SILENCER			Slow-moving
20	1	14560614930	lid, muffler			Slow-moving
21	1	14564213930	Washer			Slow-moving
22	2	10102313930	BOLT, MUFFLER			Slow-moving
23	1	90025004008	SCREW, TAPPING			

Copyright YAMABIKO EUROPE SA

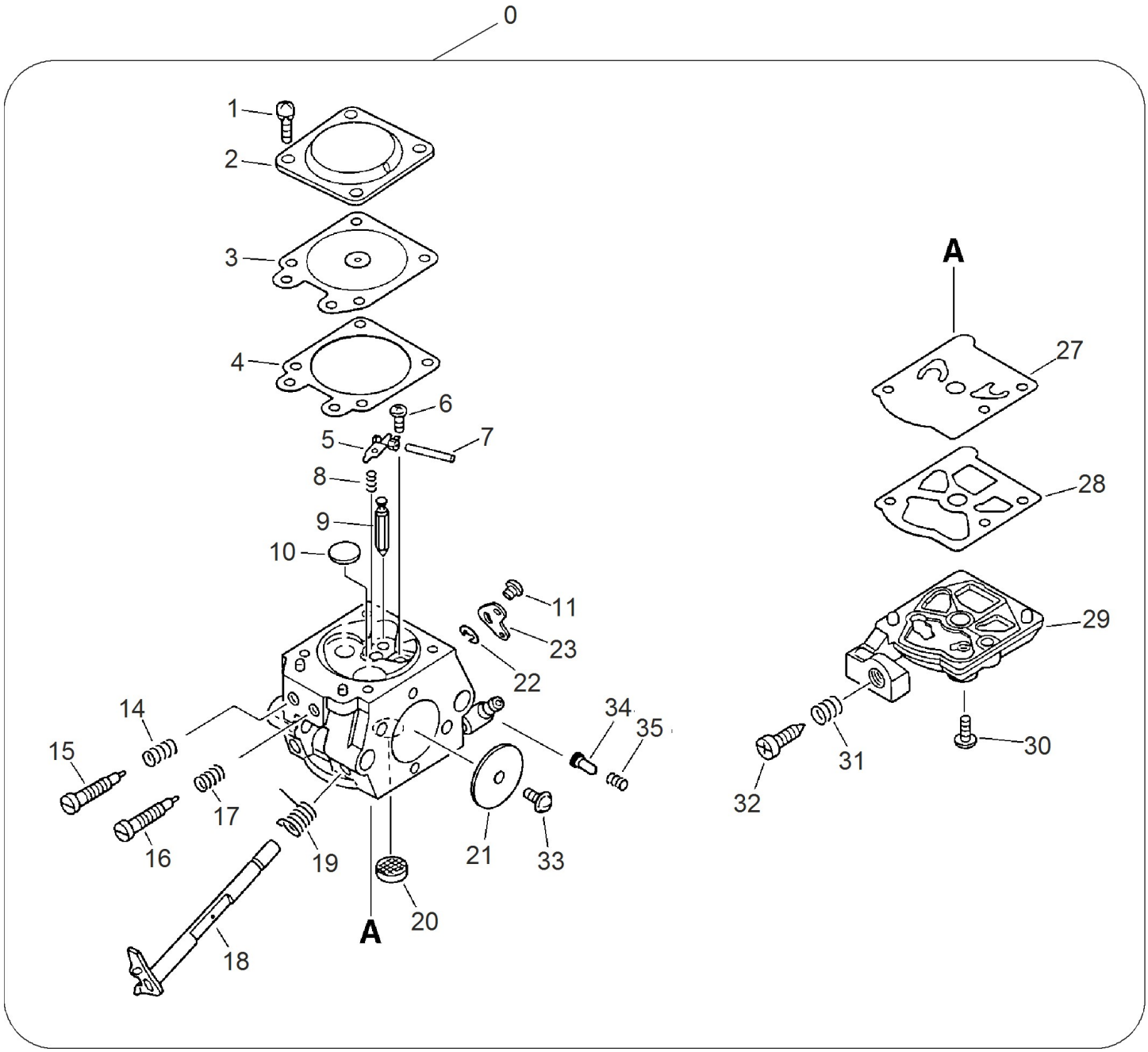

Copyright YAMABIKO EUROPE SA

Illustration Carburettor WT385 to S.-Nr.: 007778

Nummer	Antal	Kode	Beskrivelse	Vedhæftet fil	Recommended Stock Item	Remark
0	1	12300060131	CARBURETOR	2004-194		Medium-moving
1	4	12313002960	SCREW			Slow-moving
2	1	12314203930	COVER, M. DIAPHRAGM			Slow-moving
3	1	12314103930	DIAPHRAGM, METERING	Y2011-462		Fast-moving
4	1	12314027230	GASKET,M. DIAPHRAGM			Fast-moving
5	1	12312303930	LEVER, METERING			Slow-moving
6	1	12313903930	SCREW, M. LEVER PIN			Slow-moving
7	1	12313803930	PIN, METERING LEVER			Slow-moving
8	1	12312203930	Spring, Meter Lever			Slow-moving
8	1	12312206530	Spring			
9	1	12313704260	Valve, Inlet Needle			Slow-moving
10	1	12314610631	PLUG, WELCH			Slow-moving
11	1	12311403930	BOLT			
14	1	12311922130	SPRING, NEEDLE			Slow-moving
15	1	12312039530	ADJUST SCREW			Slow-moving
16	1	12311824430	ADJUST SCREW			Slow-moving
17	1	12312122130	SPRING, NEEDLE			Slow-moving
18	1	12311737330	ROD THROTTLE			
19	1	12311347530	SPRING, THR. RTN.			Medium-moving
20	1	12312610631	SCREEN, INLET			Medium-moving
21	1	12311605230	WASHER 10 (10.5*21*2)			Slow-moving
22	1	12312715030	RING			Slow-moving
23	1	12315015030	LEVER, THROTTLE			
27	1	12311215030	DIAPHRAGM, FUEL PUMP			Fast-moving
28	1	12312515030	GASKET, FUEL PUMP			Fast-moving
29	1	12312409320	COVER FUEL PUMP			Slow-moving
30	1	12311003930	SCREW, PUMP COVER			Slow-moving
31	1	12313311130	Spring			Slow-moving
32	1	12313419730	BOLT			Slow-moving
33	1	12311438830	SCREW			Slow-moving
34	1	12318539130	PISTON ASSY			Slow-moving
35	1	12318634330	Spring, Start Valve			Slow-moving

Copyright YAMABIKO EUROPE SA

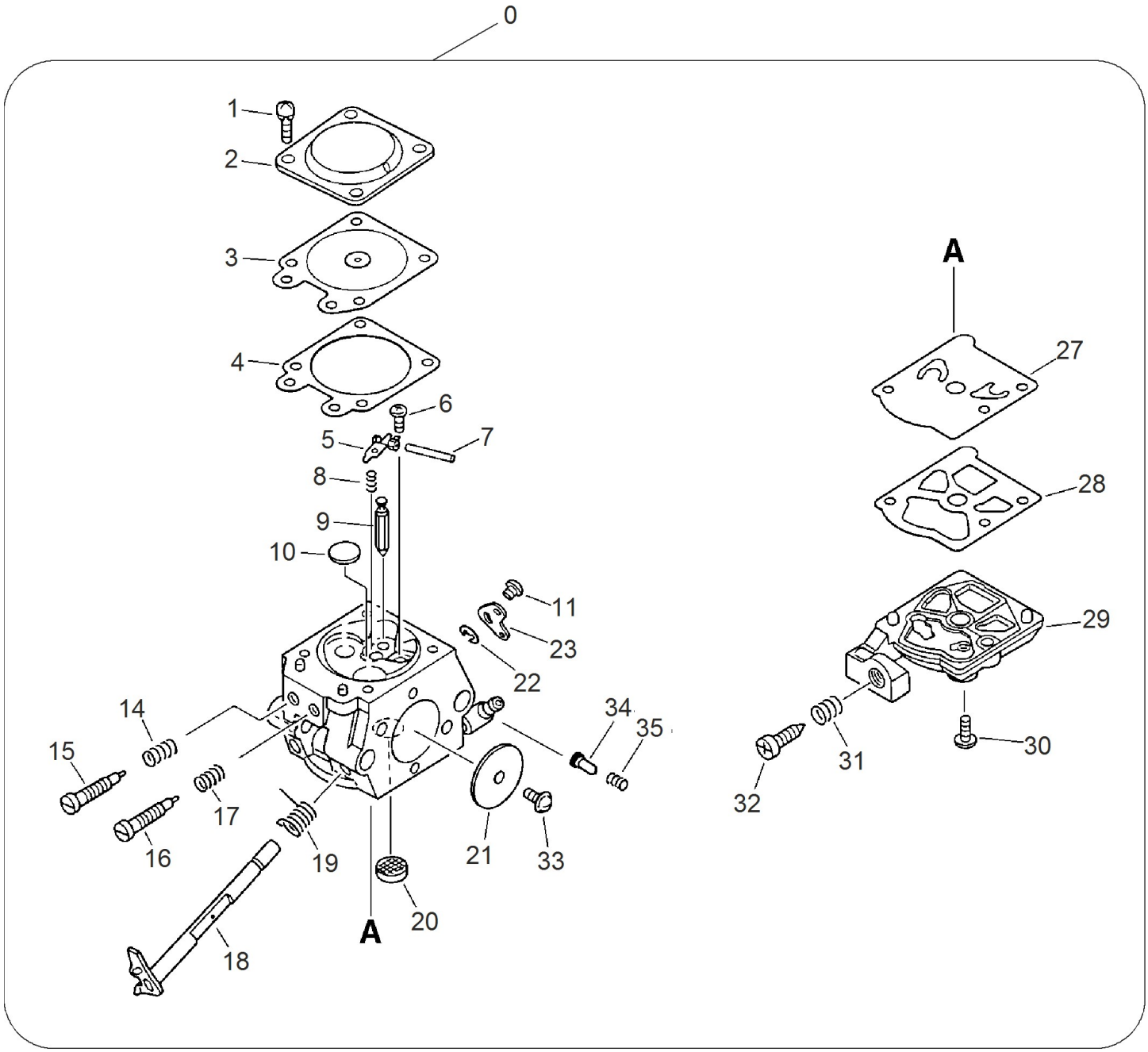

Copyright YAMABIKO EUROPE SA

Nummer	Antal	Kode	Beskrivelse	Vedhæftet fil	Recommended Stock Item	Remark
0	1	12300060131	CARBURETOR	2004-194		Medium-moving
1	4	12313002960	SCREW			Slow-moving
2	1	12314203930	COVER, M. DIAPHRAGM			Slow-moving
3	1	12314103930	DIAPHRAGM, METERING	Y2011-462		Fast-moving
4	1	12314027230	GASKET,M. DIAPHRAGM			Fast-moving
5	1	12312303930	LEVER, METERING			Slow-moving
6	1	12313903930	SCREW, M. LEVER PIN			Slow-moving
7	1	12313803930	PIN, METERING LEVER			Slow-moving
8	1	12312203930	Spring, Meter Lever			Slow-moving
8	1	12312206530	Spring			
9	1	12313704260	Valve, Inlet Needle			Slow-moving
10	1	12314610631	PLUG, WELCH			Slow-moving
11	1	12311403930	BOLT			
14	1	12311922130	SPRING, NEEDLE			Slow-moving
15	1	12312039530	ADJUST SCREW			Slow-moving
16	1	12311824430	ADJUST SCREW			Slow-moving
17	1	12312122130	SPRING, NEEDLE			Slow-moving
18	1	12311739630	SHAFT, THROTTLE			Slow-moving
19	1	12311347530	SPRING, THR. RTN.			Medium-moving
20	1	12312610631	SCREEN, INLET			Medium-moving
21	1	12311605230	WASHER 10 (10.5*21*2)			Slow-moving
22	1	12312715030	RING			Slow-moving
23	1	12315039230	LEVER, THROTTLE			Slow-moving
27	1	12311215030	DIAPHRAGM, FUEL PUMP			Fast-moving
28	1	12312539630	GASKET			Fast-moving
29	1	12312409320	COVER FUEL PUMP			Slow-moving
30	1	12311003930	SCREW, PUMP COVER			Slow-moving
31	1	12313311130	Spring			Slow-moving
32	1	12313419730	BOLT			Slow-moving
33	1	12311438830	SCREW			Slow-moving
34	1	12318539130	PISTON ASSY			Slow-moving
35	1	12318634330	Spring, Start Valve			Slow-moving

Copyright YAMABIKO EUROPE SA

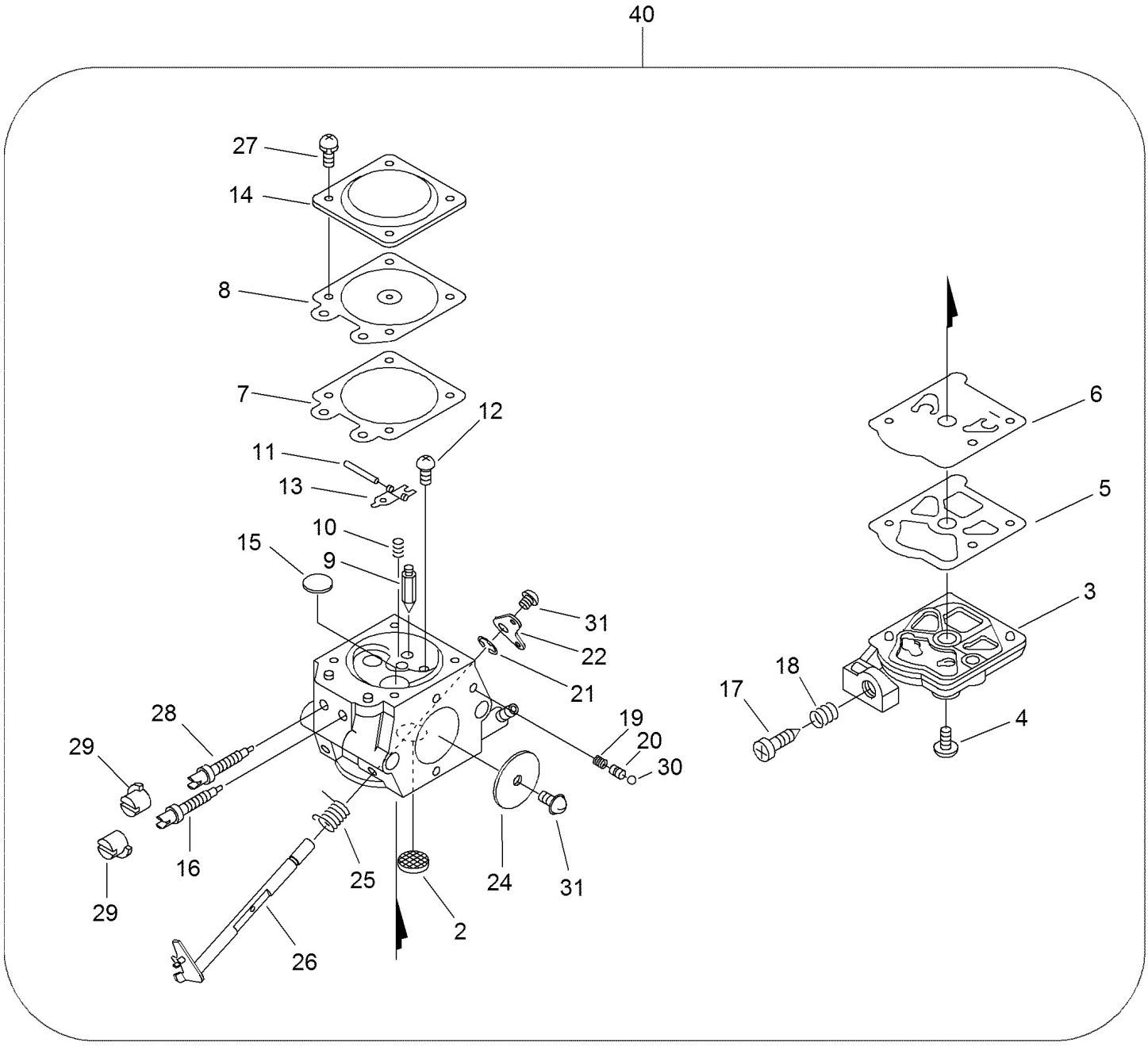

Copyright YAMABIKO EUROPE SA

Nummer	Antal	Kode	Beskrivelse	Vedhæftet fil	Recommended Stock Item	Remark
2	1	P003005040	SCREEN,INLET			Medium-moving
3	1	12312409320	COVER FUEL PUMP			Slow-moving
4	1	12311003930	SCREW, PUMP COVER			Slow-moving
5	1	12312515030	GASKET, FUEL PUMP			Fast-moving
6	1	12311215030	DIAPHRAGM, FUEL PUMP			Fast-moving
7	1	12314027230	GASKET,M. DIAPHRAGM			Fast-moving
8	1	P003001850	DIAPHRAGM, METERING	Y2011-462		Fast-moving
9	1	12313719830	VALVE, INLET NEEDLE			Slow-moving
10	1	12312203660	SPRING, METER. LEVER			Slow-moving
11	1	12313803930	PIN, METERING LEVER			Slow-moving
12	1	12313903930	SCREW, M. LEVER PIN			Slow-moving
13	1	12312303930	LEVER, METERING			Slow-moving
14	1	12314203930	COVER, M. DIAPHRAGM			Slow-moving
15	1	12314610631	PLUG, WELCH			Slow-moving
16	1	12311839231	NEEDLE, IDLE			Slow-moving
17	1	12313419730	BOLT			Slow-moving
18	1	12313311130	Spring			Slow-moving
19	1	12318609660	SPRING, START VALVE			Slow-moving
20	1	12318509660	PISTON ASSY			Slow-moving
21	1	12312715030	RING			Slow-moving
22	1	12315039230	LEVER, THROTTLE			Slow-moving
24	1	12311605230	WASHER 10 (10.5*21*2)			Slow-moving
25	1	12311347530	SPRING, THR. RTN.			Medium-moving
26	1	12311739530	ROD THROTTLE			
27	4	12313002960	SCREW			Slow-moving
28	1	12312039231	NEEDLE, HIGH SPEED			Slow-moving
29	2	P003000010	LIMITER CAP	2004-194		Medium-moving
30	1	12313609660	BALL			Slow-moving
31	2	12311438830	SCREW			Slow-moving
40	1	12300139135	CARBURETOR			Medium-moving

Copyright YAMABIKO EUROPE SA

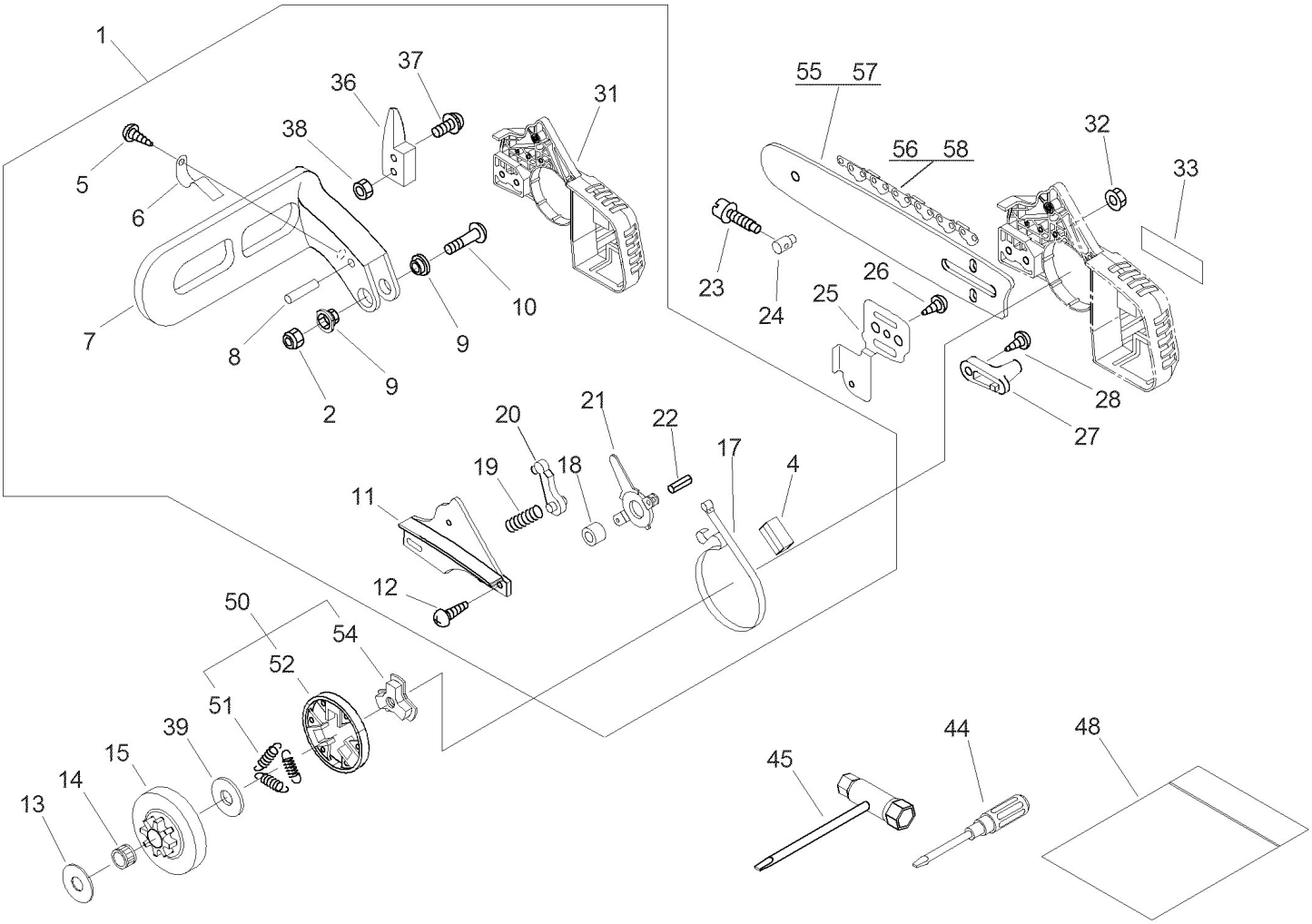

Copyright YAMABIKO EUROPE SA

Illustration Clutch, cutting set, chain brake from S.-Nr.: 36000001

Nummer	Antal	Kode	Beskrivelse	Vedhæftet fil	Recommended Stock Item	Remark
1	1	43310039631	BRAKE ASY, CHAIN			Slow-moving
2	1	90056250005	LOCKNUT 5			
4	1	43331232630	COVER SEAL			Slow-moving
5	1	90025304010	SCREW, TAPPING			
6	1	43311439130	SPRING			Slow-moving
7	1	43311139631	LEVER BRAKE			Slow-moving
8	1	90033040238	BOLT			
9	2	43316739130	SPACER			Slow-moving
10	1	9131805032	SCREW			Slow-moving
11	1	43331039130	COVER			Slow-moving
12	3	90025304012	SCREW, TAPPING			
13	1	17501439131	WASHER, CLUTCH			Slow-moving
14	1	V555000150	BEARING,NEEDLE 10	Y2014-540		Medium-moving
15	1	17500539133	DRUM, CLUTCH	Y2021-722		Medium-moving
17	1	43312339130	BAND, BRAKE			Slow-moving
18	1	43311635430	SPACER 8			Slow-moving
19	1	43312235430	SPRING, BRAKE			Medium-moving
20	1	43320935430	stopper			Slow-moving
21	1	43320835431	LEVER, BRAKE			Slow-moving
22	1	90033040088	ROLLER 4*8.8			
23	1	43301639131	BOLT			Slow-moving
24	1	43301403931	TENSIONER	2004-213		Slow-moving
25	1	43301239131	PLATE GUIDE			Slow-moving
26	1	90025304010	SCREW, TAPPING			
27	1	43302635430	CATCHER, CHAIN			Medium-moving
28	1	90025305020	SCREW 5*20			
31	1	43300539133	GUARD, SPROCKET			Slow-moving
32	2	43301903933	NUT, FLANGE 6			Slow-moving
33	1	X502000340	LABEL,ECHO			Slow-moving
36	1	43317139630	WEIGHT			Slow-moving
37	2	90023804020	BOLT			
38	2	90050000004	NUT			
39	1	A551000010	PLATE,CLUTCH	2003-125		Slow-moving
44	1	89581203930	SCREWDRIVER 50			Slow-moving
45	1	89541003930	WRENCH, W/S. DRIVER			Slow-moving
48	1	X698000050	TOOL,CASE			
50	1	A056000070	CLUTCH	2003-125		Medium-moving
51	3	V451000470	SPRING,TENSION	2003-125		Medium-moving
52	1	P021005810	CLUTCH SHOE SET	2003-125		Medium-moving
54	1	A552000020	HUB,CLUTCH	2003-125		Medium-moving
55	1	S30RC503/8	Bar for Chain Saw X122-000071			
56	1	KE30133847	Saw chain, 30 cm 47 drive links, pitch 3/8"H			

Copyright YAMABIKO EUROPE SA

Nummer	Antal	Kode	Beskrivelse	Vedhæftet fil	Recommended Stock Item	Remark
57	1	S35RC50M3/8	BAR, GUIDE X123-000131			
58	1	KE35133853	Saw chain, 35 cm 53 drive links, pitch 3/8"H			

Copyright YAMABIKO EUROPE SA

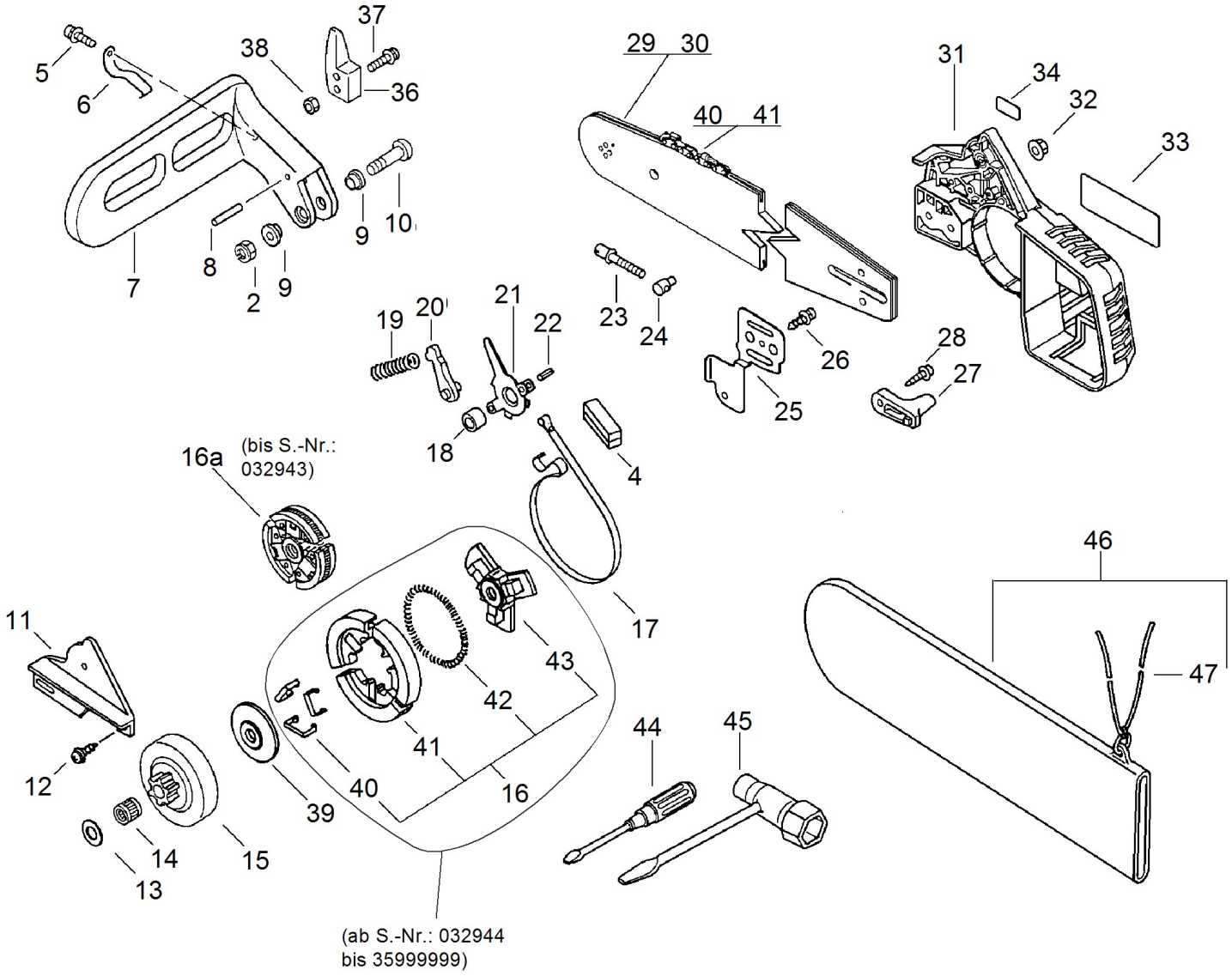

Copyright YAMABIKO EUROPE SA

Illustration Clutch, cutting set, chain brake up to serial no.: 35999999

Nummer	Antal	Kode	Beskrivelse	Vedhæftet fil	Recommended Stock Item	Remark
2	1	90056000005	LOCKNUT 5			
4	1	43331232630	COVER SEAL			Slow-moving
5	1	90025304010	SCREW, TAPPING			
6	1	43311439130	SPRING			Slow-moving
7	1	43311139631	LEVER BRAKE			Slow-moving
8	1	90033040238	BOLT			
8	1	90033030240	Pin 3*24			
9	2	43316739130	SPACER			Slow-moving
10	1	9131805032	SCREW			Slow-moving
11	1	43331039130	COVER			Slow-moving
12	3	90025304012	SCREW, TAPPING			
13	1	17501439130	WASHER, CLUTCH	2001-056		Slow-moving
14	1	17501235630	BEARING, NEEDLE	Y2014-540		Medium-moving
15	1	17500539132	DRUM, CLUTCH	2002-074		Medium-moving
16	1	A056000010	CLUTCH	2003-125		Medium-moving
16a	1	17500035630	CLUTCH ASSY			Medium-moving
17	1	43312339130	BAND, BRAKE			Slow-moving
18	1	43311635430	SPACER 8			Slow-moving
19	1	43312235430	SPRING, BRAKE			Medium-moving
20	1	43320935430	stopper			Slow-moving
21	1	43320835431	LEVER, BRAKE			Slow-moving
22	1	90033040088	ROLLER 4*8.8			
23	1	43301639131	BOLT			Slow-moving
24	1	43301403931	TENSIONER	2004-213		Slow-moving
25	1	43301239131	PLATE GUIDE			Slow-moving
26	1	90025304010	SCREW, TAPPING			
27	1	43302635430	CATCHER, CHAIN			Medium-moving
28	1	90025305020	SCREW 5*20			
29	1	S30RC503/8	Bar for Chain Saw X122-000071			
30	1	S35RC50M3/8	BAR, GUIDE X123-000131			
31	1	43300539133	GUARD, SPROCKET			Slow-moving
32	2	43301903933	NUT, FLANGE 6			Slow-moving
33	1	89015139130	Lable			Slow-moving
34	1	89031639130	LABEL, CAUTION			Slow-moving
36	1	43317139630	WEIGHT			Slow-moving
37	2	90023804020	BOLT			
38	2	90050000004	NUT			
39	1	17501939430	PLATE, CLUTCH	2003-125		Slow-moving
40	1	KE30133847	Saw chain, 30 cm 47 drive links, pitch 3/8"H			
40	3	17502259530	SPRING, FLAT	2003-125		Slow-moving
41	1	KE35133853	Saw chain, 35 cm 53 drive links, pitch 3/8"H			

Copyright YAMABIKO EUROPE SA

Illustration Clutch, cutting set, chain brake up to serial no.: 35999999

Nummer	Antal	Kode	Beskrivelse	Vedhæftet fil	Recommended Stock Item	Remark
41	1	P021000270	Clutch, Shoeset	2003-125		
42	1	17501839430	SPRING, CLUTCH	2003-125		Medium-moving
43	1	A552000000	Hub, Clutch	2003-125		Medium-moving
44	1	89581203930	SCREWDRIVER 50			Slow-moving
45	1	89541003930	WRENCH, W/S. DRIVER			Slow-moving
46	1	89851314531	SCABBARD, GUIDE BAR			Slow-moving
47	1	89856814530	ROPE	2004-178		Medium-moving

Copyright YAMABIKO EUROPE SA

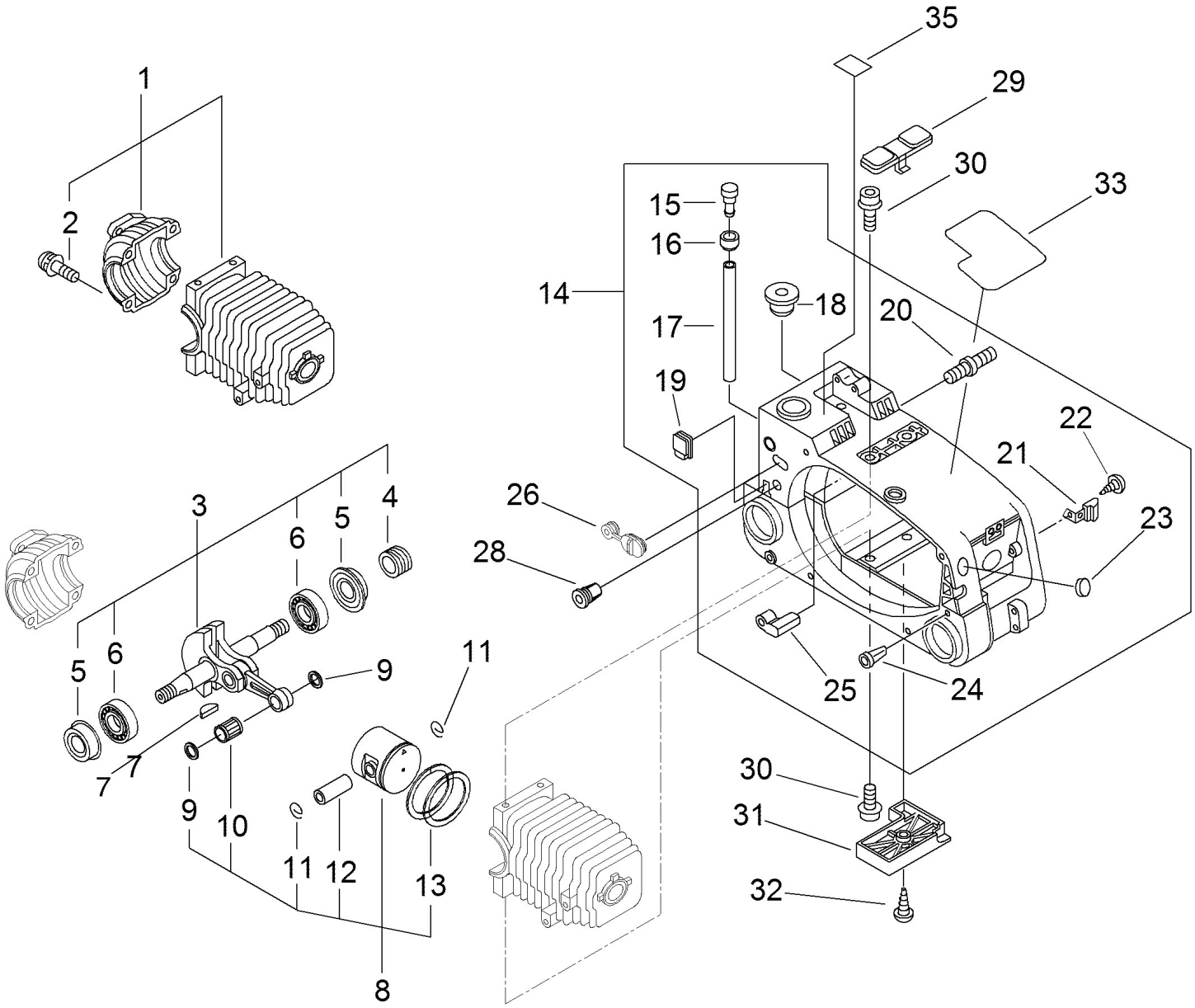

Copyright YAMABIKO EUROPE SA

Illustration engine, housing

Nummer	Antal	Kode	Beskrivelse	Vedhæftet fil	Recommended Stock Item	Remark
1	1	10020270031	CRANKCASE SET			
2	4	90023805025	SCREW 5*25			
3	1	P021011013	CRANKSHAFT ASY			Slow-moving
4	1	V652000021	GEAR, WORM			Medium-moving
5	2	V505000011	SEAL,OIL 12			Slow-moving
6	2	9403536201	BEARING BALL			
7	1	10014239130	KEY, WOODRUFF			Slow-moving
8	1	10000039230	PISTON KIT			
9	2	10001411520	SPACER, PISTON PIN			Slow-moving
10	1	17501203930	BEARING, NEEDLE			Medium-moving
11	2	10001504630	CIRCLIP, PISTON PIN			Slow-moving
12	1	10001315330	PIN, PISTON			Slow-moving
13	2	10001113330	Ring, Piston			Medium-moving
14	1	10400039134	Transmission housing CS-3000,3050,3400			
15	1	13130056431	VENT ASSEMBLY, FUEL			Medium-moving
16	1	13132839130	COVER VENT			Slow-moving
17	1	13201004920	FUEL PIPE			Slow-moving
18	1	13211539130	GROMMET FUEL			Slow-moving
19	1	10403439130	PLUG			Slow-moving
20	2	V224000031	BOLT,STUD 6			Slow-moving
21	1	10421539131	CLIP			Slow-moving
22	1	90025304010	SCREW, TAPPING			
23	1	16391139130	PLUG			Slow-moving
24	1	43611413930	VALVE, CHECK			Medium-moving
25	1	13033639530	COLLAR			Slow-moving
26	1	17881039630	GROMMET, CHOKE	2004-194		Slow-moving
28	1	12902339131	grommet idle	2002-103		Slow-moving
29	1	10402939130	PLUG			Slow-moving
30	4	90010605016	BOLT HSH, FLANGE			
31	1	10404439130	PLUG			Slow-moving
32	1	90025604016	SCREW, TAPPING			
33	1	X524002130	LABEL			Slow-moving
35	1	89063138230	Label			Slow-moving

Copyright YAMABIKO EUROPE SA

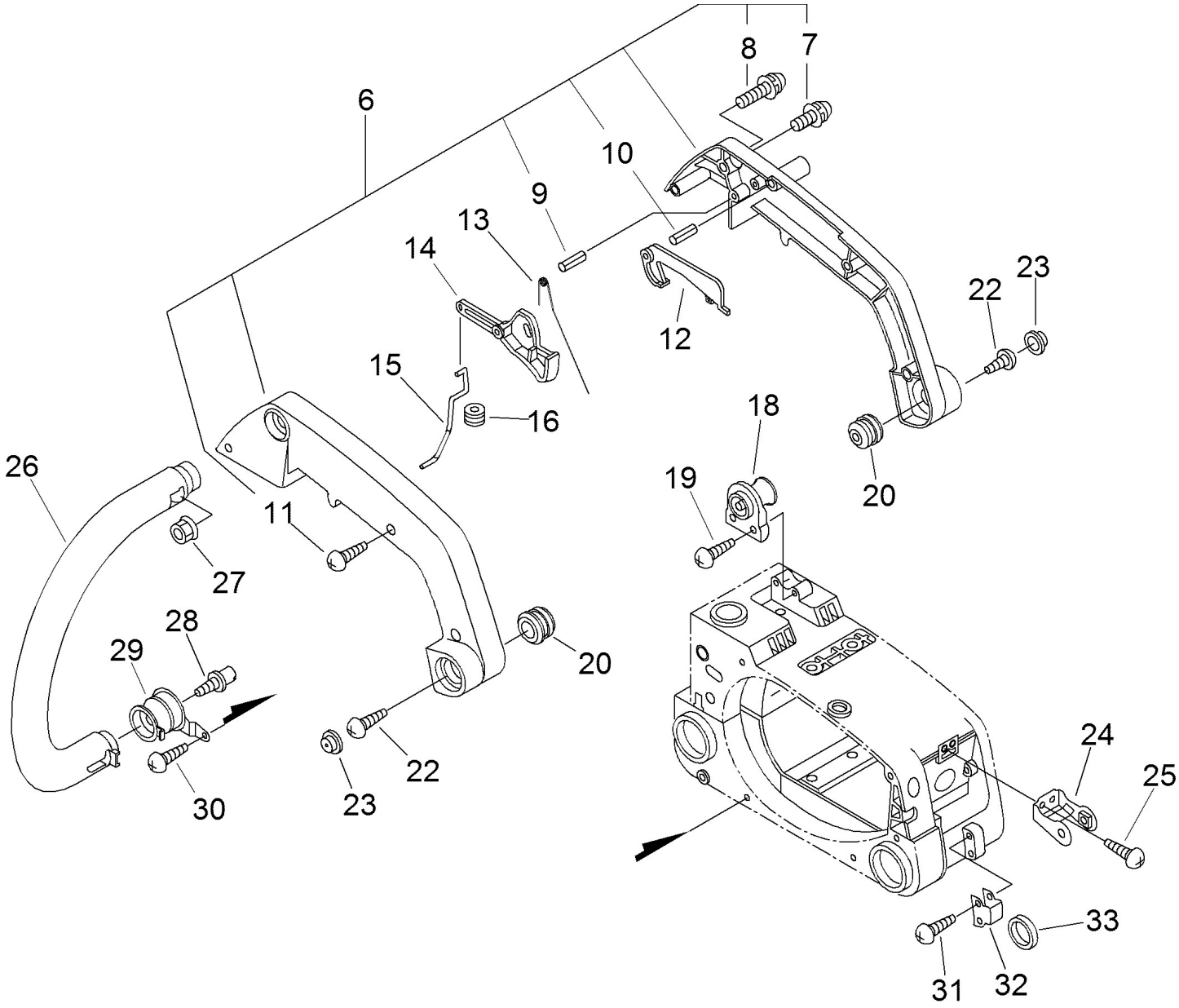

Copyright YAMABIKO EUROPE SA

Nummer	Antal	Kode	Beskrivelse	Vedhæftet fil	Recommended Stock Item	Remark
6	1	35110039131	HANDLE SET, REAR BL			
7	1	90023805014	SCREW			
8	1	90023805035	SCREW 5*35			
9	1	90034540025	PIN, SPRING 4*25			
10	1	90034540020	TENSIONER, CHAIN			
11	3	90025604016	SCREW, TAPPING			
12	1	17809039130	LOCK LEVER			Slow-moving
13	1	17804339131	SPRING, THR.RETURN			Medium-moving
14	1	17801039131	Throttle CS-3000/3400			Slow-moving
15	1	17801139131	ROD, THROTTLE			Slow-moving
16	1	17821039130	GASKET			Slow-moving
18	1	10090739131	CUSHION			Medium-moving
19	2	90025304014	SCREW 4*14			
20	2	10092139131	CUSHION			Medium-moving
22	2	90023804010	SCREW			
23	2	10091815130	CAP, CUSHION			Slow-moving
24	1	35112339131	SUPPORTER			Slow-moving
25	2	90025304014	SCREW 4*14			
26	1	35161039130	HANDLE FRONT			Slow-moving
27	1	90051600005	NUT, FRANGE 5			
28	1	10091533930	BOLT			Slow-moving
29	1	10091035630	CUSHION			Medium-moving
30	1	90025604016	SCREW, TAPPING			
31	2	90023804016	4x16 screw			
32	1	30031439130	FIXTURE HARNESS			Slow-moving
33	1	30101652730	RING,HARNESS			Slow-moving

Copyright YAMABIKO EUROPE SA

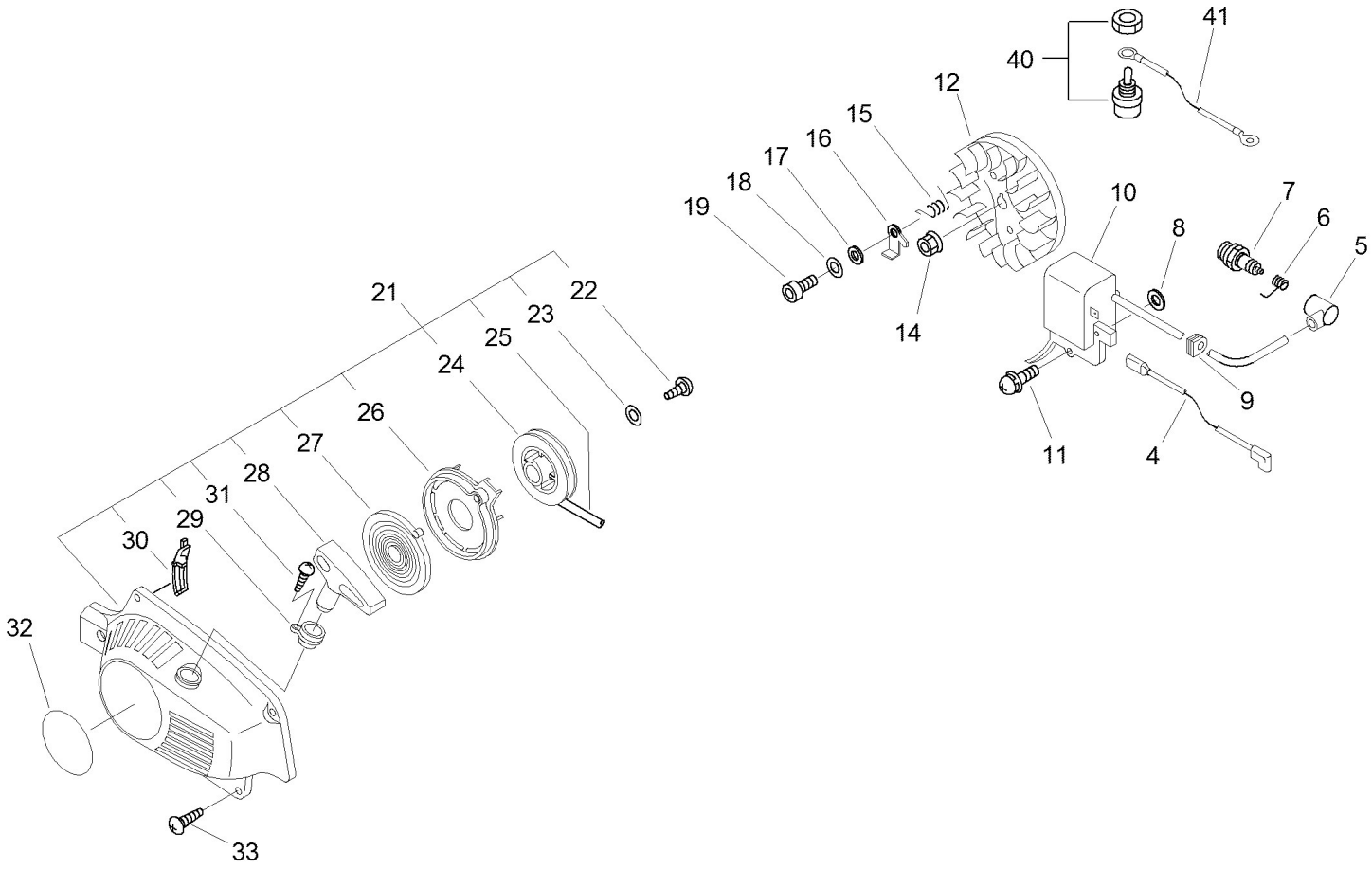

Copyright YAMABIKO EUROPE SA

Illustration Starter, ignition from serial no.: 025154

Nummer	Antal	Kode	Beskrivelse	Vedhæftet fil	Recommended Stock Item	Remark
4	1	16201039431	LEAD, GROUND			Slow-moving
5	1	15901201620	CAP, SPARK PLUG			Slow-moving
6	1	15901103432	COIL, SPARK PLUG CAP			Slow-moving
7	1	15901010230	"PLUG, SPARK (BPMR-7A"			Fast-moving
8	2	15011716430	SPACER			Slow-moving
9	1	15611004920	GROMMET			Slow-moving
10	1	A411000150	COIL,IGNITION			Slow-moving
11	2	90023805022	SCREW			
12	1	15680039233	Flywheel CS-3400			Slow-moving
14	1	90051500008	NUT, FLANGE 8			
15	2	17723435430	SPRING, RETURN			Medium-moving
16	2	A514000001	PAWL			Slow-moving
17	2	17724704630	SPACER, RATCHET			Slow-moving
18	2	90060300005	WASHER 5			
19	2	V203000090	BOLT,5			Slow-moving
21	1	17720039433	STARTER ASY			
22	1	90025304014	SCREW 4*14			
23	1	17721404630	WASHER			Slow-moving
24	1	17721535632	REEL,ROPE			Slow-moving
25	1	17722606530	ROPE, STARTER			
26	1	17722135631	PLATE, STARTER			Slow-moving
27	1	17722035430	SPRING, REWIND			Medium-moving
28	1	17722835430	GRIP, STARTER (BL)			Slow-moving
29	1	17722739131	GUIDE, ROPE BL			Slow-moving
30	1	17725639130	PLUG			Slow-moving
31	1	90029603014	BOLT			
32	1	X502000780	LABEL,ECHO			Slow-moving
33	4	90025604016	SCREW, TAPPING			
40	1	16340039130	SWITCH, IGNITION			Slow-moving
41	1	16201039131	LEAD, GROUND			Slow-moving

Copyright YAMABIKO EUROPE SA

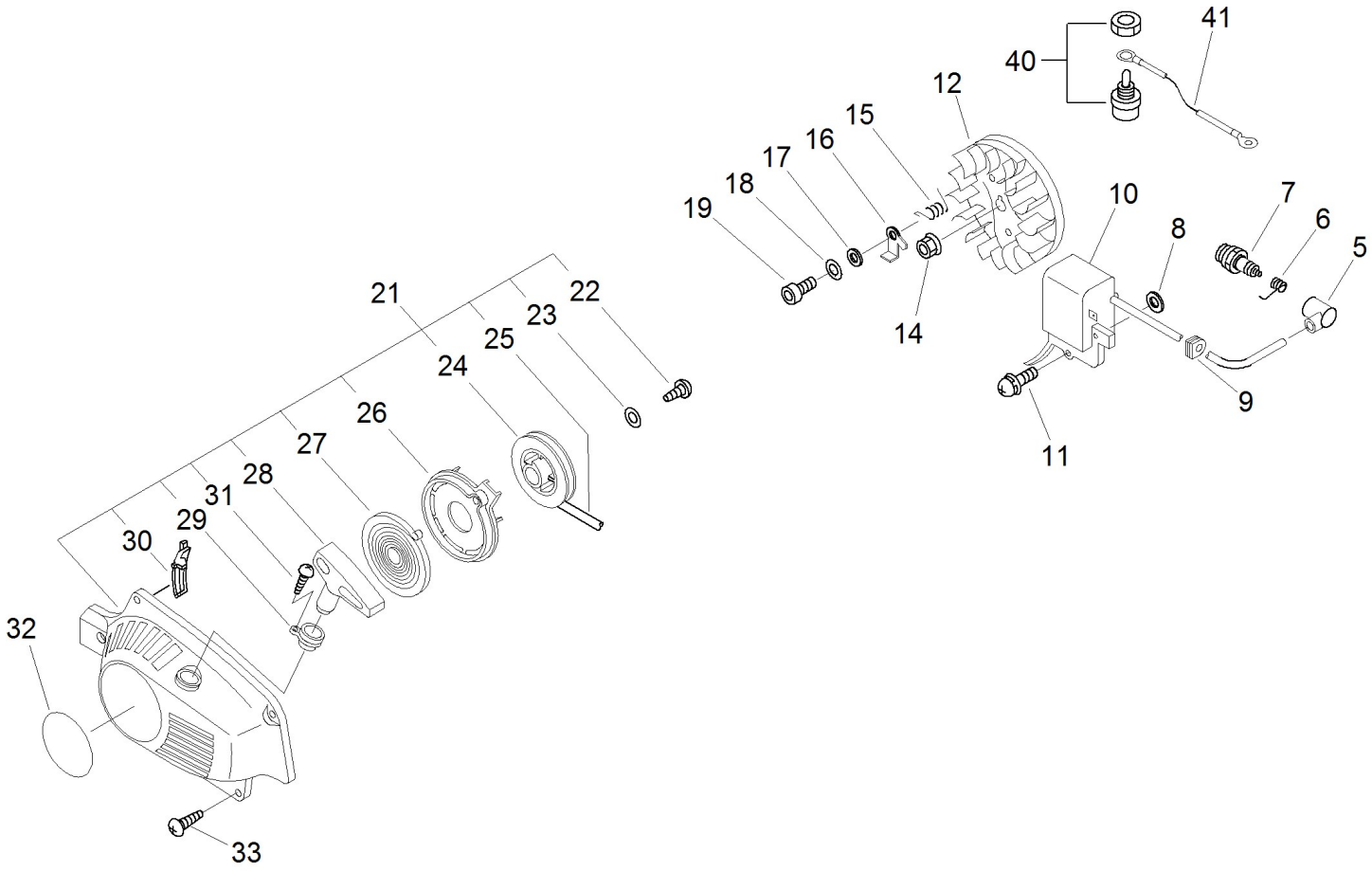

Copyright YAMABIKO EUROPE SA

Illustration Starter, ignition up to serial number: 025153

Nummer	Antal	Kode	Beskrivelse	Vedhæftet fil	Recommended Stock Item	Remark
5	1	15901201620	CAP, SPARK PLUG			Slow-moving
6	1	15901103432	COIL, SPARK PLUG CAP			Slow-moving
7	1	15901010230	"PLUG, SPARK (BPMR-7A"			Fast-moving
8	2	15011716430	SPACER			Slow-moving
9	1	15611004920	GROMMET			Slow-moving
10	1	15662639130	COIL, IGNITION			Slow-moving
11	2	90023805020	SCREW			
12	1	15680035630	FLYWEHEEL			Slow-moving
14	1	90051500008	NUT, FLANGE 8			
15	2	17723435430	SPRING, RETURN			Medium-moving
16	2	A514000001	PAWL			Slow-moving
17	2	17724704630	SPACER, RATCHET			Slow-moving
18	2	90060300005	WASHER 5			
19	2	V203000090	BOLT,5			Slow-moving
21	1	17720039433	STARTER ASY			
22	1	90025304014	SCREW 4*14			
23	1	17721404630	WASHER			Slow-moving
24	1	17721535632	REEL,ROPE			Slow-moving
25	1	17722606530	ROPE, STARTER			
26	1	17722135631	PLATE, STARTER			Slow-moving
27	1	17722035430	SPRING, REWIND			Medium-moving
28	1	17722835430	GRIP, STARTER (BL)			Slow-moving
29	1	17722739131	GUIDE, ROPE BL			Slow-moving
30	1	17725639130	PLUG			Slow-moving
31	1	90029603014	BOLT			
32	1	X502000780	LABEL,ECHO			Slow-moving
33	4	90025604016	SCREW, TAPPING			
40	1	16340039130	SWITCH, IGNITION			Slow-moving
41	1	16201039131	LEAD, GROUND			Slow-moving

Copyright YAMABIKO EUROPE SA

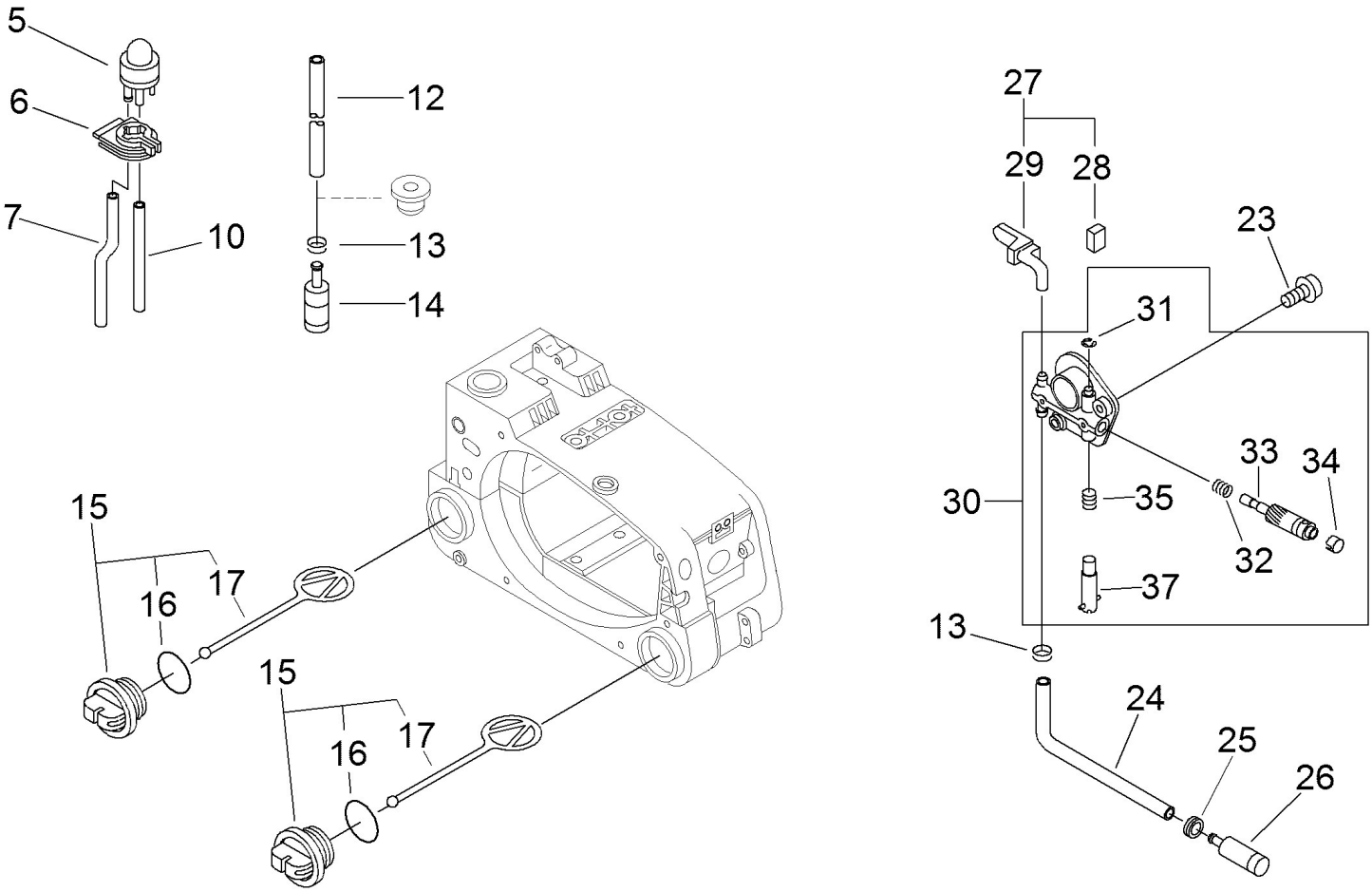

Copyright YAMABIKO EUROPE SA

Illustration tanks, oil pump

Nummer	Antal	Kode	Beskrivelse	Vedhæftet fil	Recommended Stock Item	Remark
5	1	12318139130	PUMP, FUEL			Fast-moving
6	1	13275839131	BRACKET, PUMP	2002-103		Slow-moving
7	1	13271639130	PIPE 2X4X42			Slow-moving
10	1	V471001200	PIPE			Slow-moving
12	1	13201239130	PIPE FUEL			Slow-moving
13	2	V490001230	CLIP			Slow-moving
14	1	13120514931	STRAINER,FUEL	Y2021-700		Fast-moving
15	2	P021007630	CAP ASY, TANK	2004-177		Slow-moving
16	2	90072100025	O ring CS-4200			
17	2	A365000050	CONNECTOR,CAP	2004-177		Medium-moving
23	2	90023505012	Screw M5x12			
24	1	V471000110	PIPE			Slow-moving
25	1	13211501461	GROMMET			Slow-moving
26	1	43620502832	STRAINER, OIL			
27	1	43720139131	Pipe			
28	1	43724439130	PAD, FORM			Slow-moving
29	1	43721139133	PIPE			Slow-moving
30	1	C022000010	OILER,ASM AUTO	2006-328		Slow-moving
31	1	12532715130	CLIP			Slow-moving
32	1	P022010660	SPRING			Slow-moving
33	1	P022010650	PLUNGER			Slow-moving
34	1	P022010640	PLUG			Slow-moving
35	1	P022010670	SPRING			Slow-moving
37	1	P022010680	SCREW ASS'Y, ADJUST			Slow-moving

Copyright YAMABIKO EUROPE SA