2026-11-23

Husqvarna Automower® 560 EPOS®



AUTOMOWER 540 EPOS, AUTOMOWER 560 EPOS
ACCESSORIES

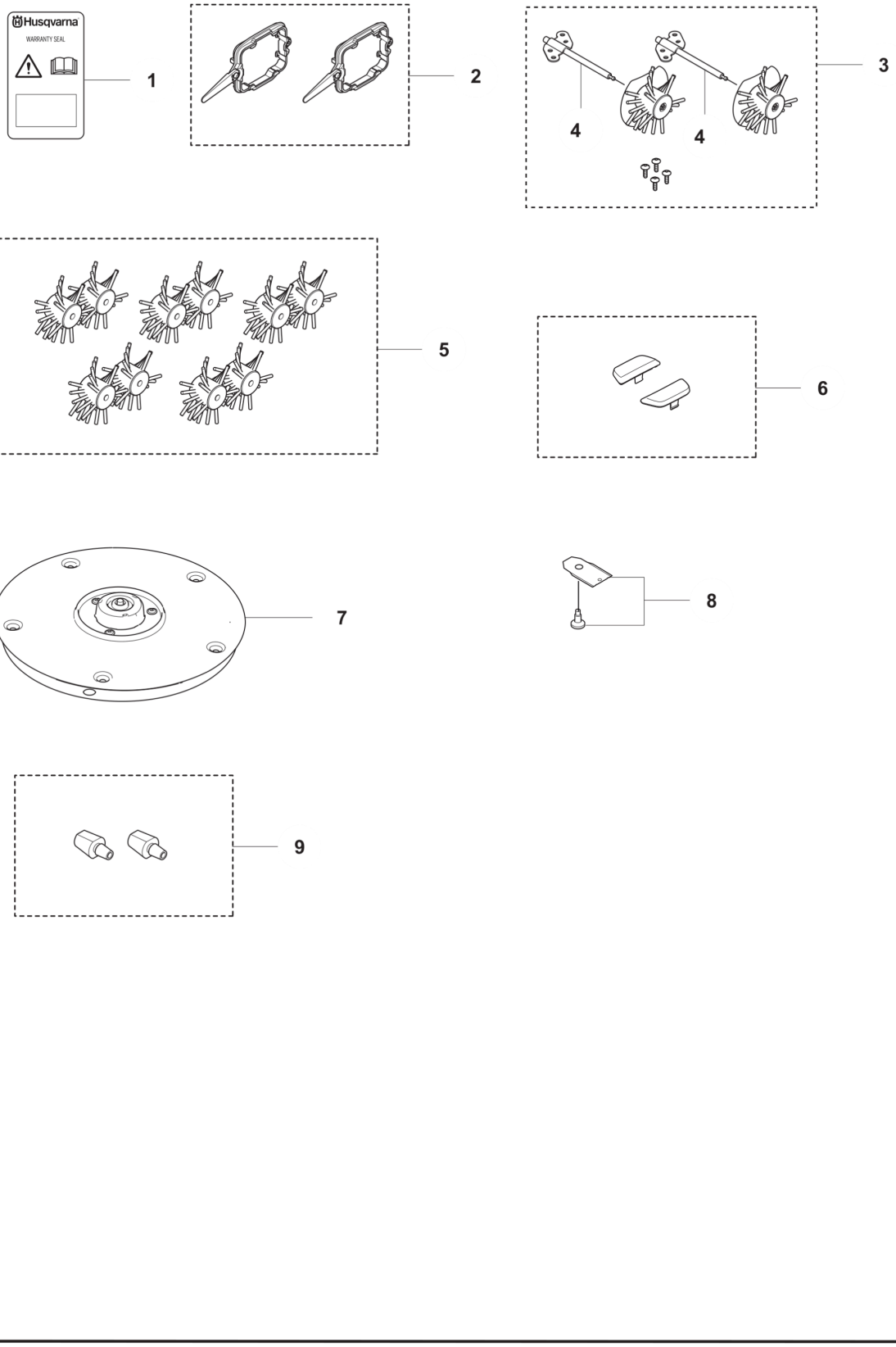

Reference	Artikelnummer	Varenavn	Antal	Kommentar
1	580689502	MÆRKAT	1	Warranty seal
2	546260001	WHEEL KIT	1	Wheel Cleaner
2	546260010	WHEEL KIT	1	Automower® Wheel Cleaner, North America
3	548283002	BØRSTESÆT	1	Wheel Brush start kit
3	548283011	BØRSTESÆT	1	Wheel Brush start kit North America only
4	546573101	AKSEL	2	
5	548283101	BØRSTESÆT	1	Wheel Brush refill kit
6	548490501	HAT	1	Cap kit
7	548021201	SKÆRESKIVE	1	Cutting disc
7	548021210	SKÆRESKIVE	1	Cutting disc North America only
8	577606505	BLADE SET	1	Blades 45 pcs incl. Screws
8	577606604	BLADE SET	1	Blades 300 pcs incl. Screws
8	599805301	BLADE SET	1	Blades 45 pcs incl. Screws
8	599805302	BLADE SET	1	Blades 300 pcs incl. Screws
9	540085601	BØSNING	1	Damper KIT 2pcs

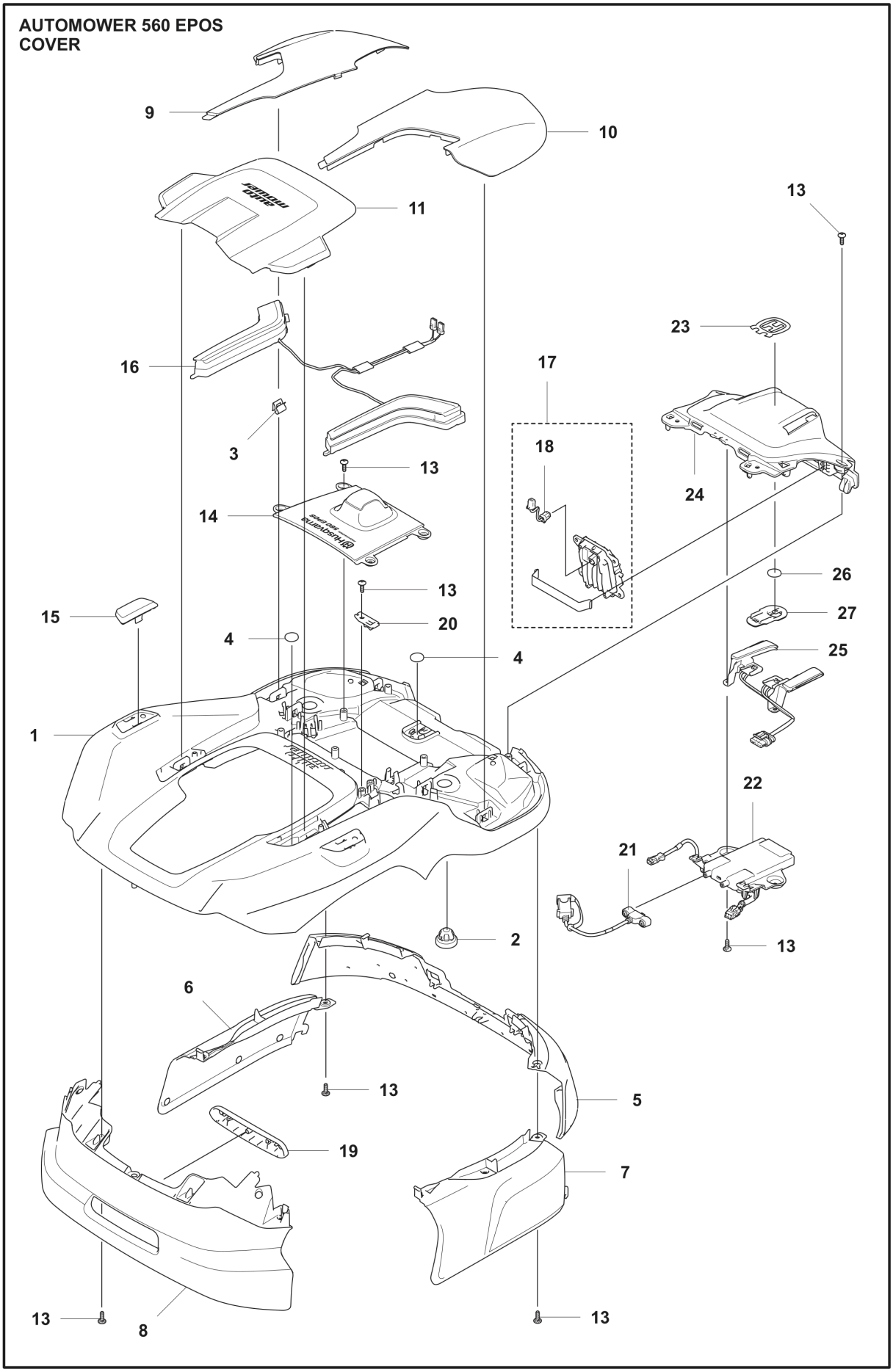
AUTOMOWER 560 EPOS
COVER
9
10
11
13
23
16
17
3
18
13
24
14
26
13
15
20
27
4
4
25
1
22
21
2
13
6
13
5
19
7
13
8
13

Reference	Artikelnummer	Varenavn	Antal	Kommentar
1	546606701	RAMME	1	
2	546632301	KOBLING	4	
3	593778401	KLEMME	8	
4	593822101	MAGNET	2	
5	546606901	KOFANGER	1	Front
6	546607001	KOFANGER	1	Left
7	546609101	KOFANGER	1	Right
8	546609301	KOFANGER	1	Rear
9	546619101	DÆKSEL	1	Left
10	547274101	DÆKSEL	1	Right
11	546910001	BESKYTTELSESKAPPE	1	HMI
13	574450101	SKRUE ITXPANT	21	
14	546619403	STØTTE	1	Front
15	546619501	STØTTE	2	Rear
16	547229001	LEDNING KPL	1	
17	538876303	SENSOR ASSY	1	Radar KIT

18	531407202	LEDNING KPL	1	
19	547565101	GREB	1	Handle
20	547156001	FÆSTE	1	
21	547164001	LEDNING KPL	1	
22	547151401	MODUL	1	Nose module
23	587423502	MÆRKAT	1	
24	547151301	HUS	1	
25	546919301	LEDNING KPL	1	Charging plate wiring assy
26	547582601	MAGNET	1	
27	547582201	HOLDER	1	Holder magnet

AUTOMOWER 560 EPOS
CONSOLE

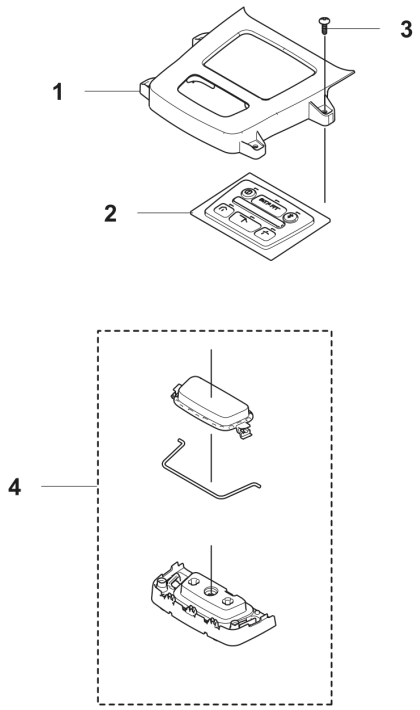

Reference	Artikelnummer	Varenavn	Antal	Kommentar
1	546625501	DÆKSEL	1	
2	546405504	TASTATUR	1	
3	574450101	SKRUE ITXPANT	4	
4	547580701	BUTTON ASSY	1	Stop button assy

AUTOMOWER 560 EPOS
CHASSIS UPPER

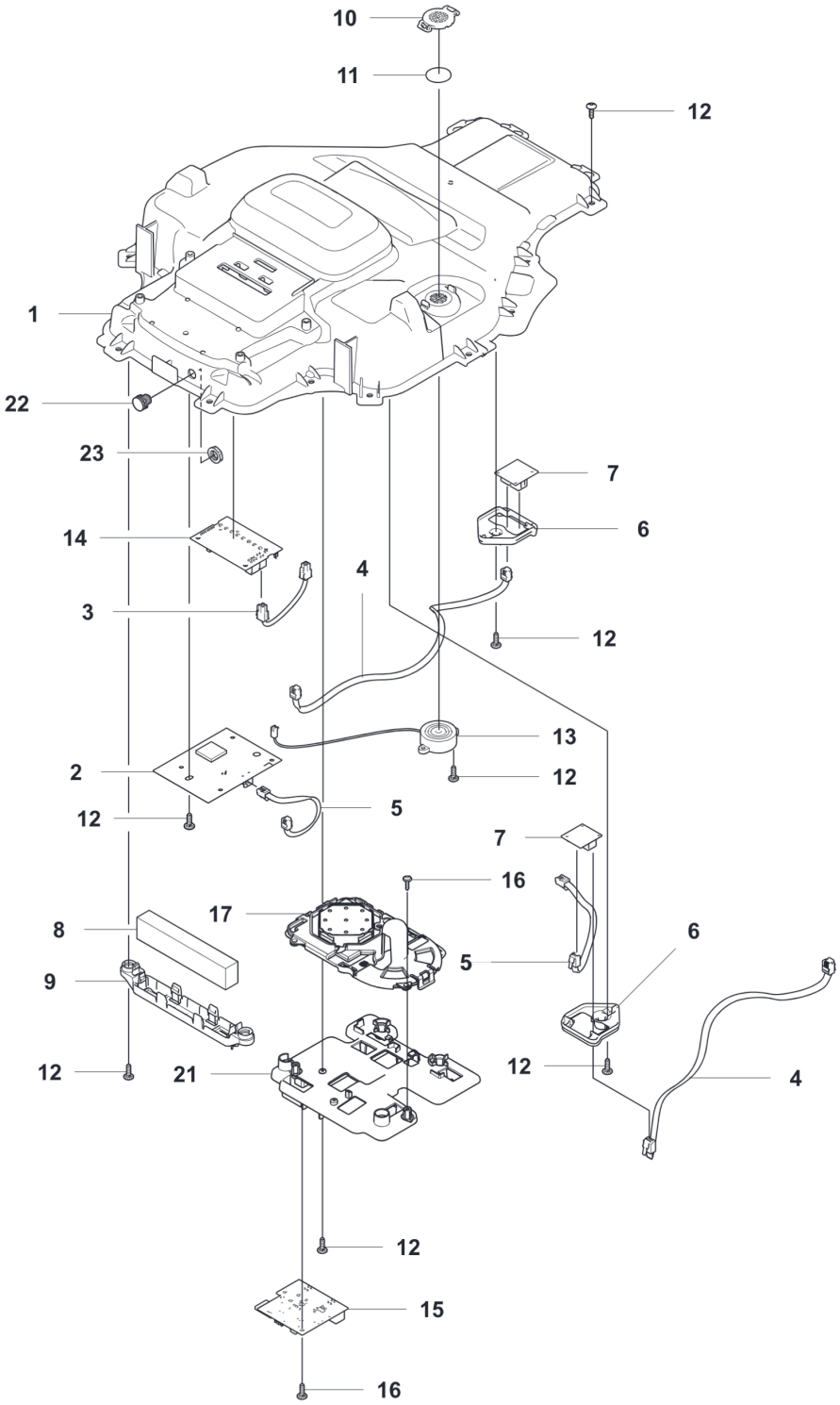

Reference	Artikelnummer	Varenavn	Antal	Kommentar
1	546625402	CHASSIS	1	
2	536462901	KREDSKORT	1	Communication circuit board, CBT10
3	547846808	LEDNING KPL	1	
4	547108612	LEDNING KPL	2	
5	536253903	LEDNING KPL	2	
6	535563901	HOLDER	2	
7	591125502	KREDSKORT	2	Magnetic senor circuit board
8	598503602	VÆGT	1	
9	531352801	HOLDER	1	Weight holder
10	586038902	DÆKSEL	1	
11	548629101	MEMBRANE	1	Air filter
12	574450101	SKRUE ITXPANT	28	
13	547309101	SUMMER	1	Buzzer
14	538947101	KREDSKORT	1	HMI circuit board
15	547006601	KREDSKORT	1	Application circut board
16	575543314	SCREW	8	

17	540538501	HOLDER KPL	1	RTK module / RTK 868 MHz Europe. From S/N 261502764
17	540955001	HOLDER KIT	1	RTK module / RTK 868 MHz Europe. Up to S/N 261502763
17	540538502	HOLDER KPL	1	RTK module / RTK 915 MHz North America. From S/N 261509057
17	540955002	HOLDER KIT	1	RTK module / RTK 915 MHz North America. Up to S/N 261509056
17	540538503	HOLDER KPL	1	RTK module / RTK 915 MHz New Zeeland. From S/N 261401086
17	547709608	HOLDER KPL	1	RTK module / RTK 915 MHz New Zeeland. Up to S/N 261401085
17	540538504	HOLDER KPL	1	RTK module / RTK 915 MHz Australia. From S/N 261400891
17	547709607	HOLDER KPL	1	RTK module / RTK 915 MHz Australia. Up to S/N 261400890
17	540538505	HOLDER KPL	1	RTK Module. No radio. (JP/LATAM)
21	540628001	HOLDER	1	From S/N EU 261502764, US/CA 261509057, NZ 261401086, AU 260901025, JP/LATAM All S/N produced
21	546625101	HOLDER	1	Up to S/N EU 261502763, US/CA 261509056, NZ 261401085, AU 260901024
22	541223101	FILTER	1	
23	541223701	FILTER	1	

AUTOMOWER 560 EPOS
CHASSIS LOWER

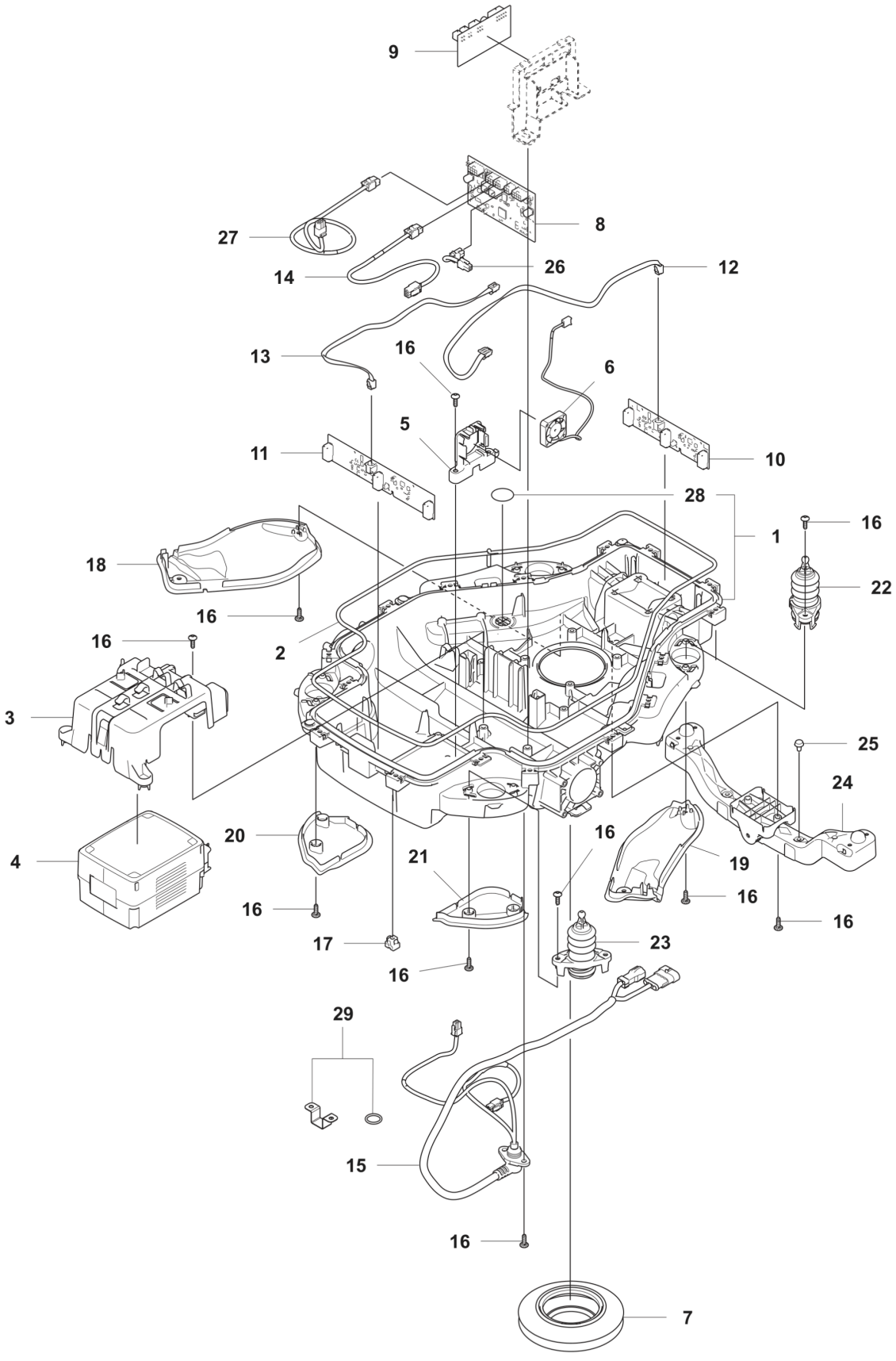

Reference	Artikelnummer	Varenavn	Antal	Kommentar
1	541382001	CHASSIS KIT	1	Chassis incl. membrane
2	574874705	TÆTNINGSLISTE	1	
3	546625001	FÆSTE	1	
4	546834501	BATTERI	1	
5	536651501	HOLDER	1	
6	547555901	FAN MOTOR	1	Cooling fan
7	599318301	BÆLG	1	
8	546326402	KREDSKORT	1	Wheel motor control circuit board
9	546326102	KREDSKORT	1	Cutting motor and Height adjustment motor circuit board
10	546001101	KREDSKORT	1	Loop receiver board front
11	546007101	KREDSKORT	1	Loop receiver board rear
12	547108604	LEDNING KPL	1	Wiring assy loop rear
13	547108611	LEDNING KPL	1	Wiring assy loop front
14	546688701	LEDNING KPL	1	Wiring assy battery
15	546640201	LEDNING KPL	1	Main cable
16	574450101	SKRUE ITXPANT	33	

17	598004501	INDSATS	16	
18	546625201	DÆKSEL	1	Dirt protection front left
19	546625301	DÆKSEL	1	Dirt protection front right
20	547044902	DÆKSEL	1	Dirt protection rear left
21	547045002	DÆKSEL	1	Dirt protection rear right
22	531281201	JOYSTICK ASSY	2	Lift and collision front
23	531281301	JOYSTICK ASSY	2	Collision Rear
24	547158401	SHAFT SYSTEM	1	Shaft assy
25	535293701	BØSNING	2	
26	547846809	LEDNING KPL	1	
27	546689101	LEDNING KPL	1	
28	548629101	MEMBRANE	1	
29	541382201	HOLDER KIT	1	

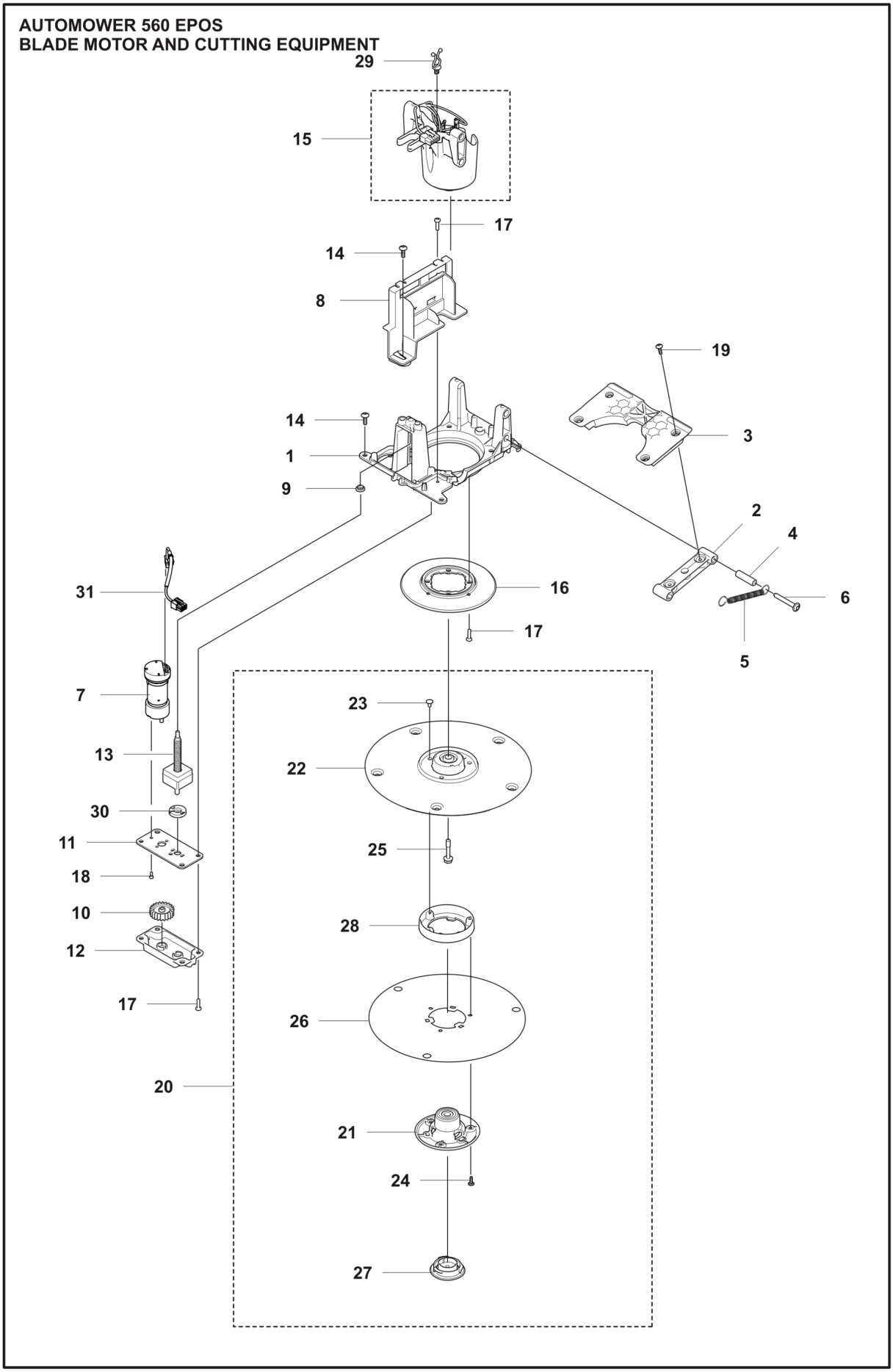
AUTOMOWER 560 EPOS
BLADE MOTOR AND CUTTING EQUIPMENT
29
15
17
14
8
19
14
3
1
9
2
4
31
16
6
17
5
7
23
22
13
30
25
11
18
28
10
12
17
26
20
21
24
27

Reference	Artikelnummer	Varenavn	Antal	Kommentar
1	546569401	RAMMEFÆSTE	1	
2	546569501	STAG	4	
3	547394201	STØTTE	1	
4	547394301	MUFFE	8	
5	547394101	FJEDER	2	
6	547790901	SCREW	8	
7	597762001	HEIGHT ADJUSTMENT MOTOR	1	Height adjustment motor
8	547178601	HOLDER	1	
9	536813301	BUSHING	1	
10	546569701	GEAR	2	
11	546569601	PLADE	1	
12	546569801	DÆKSEL	1	
13	548050301	WORM GEAR ASSY	1	
14	574450101	SKRUE ITXPANT	7	
15	546678301	CUTTER MOTOR ASSY	1	Cutting motor
16	546570201	RAMME	1	

17	548234501	SCREW	7	
18	547793201	SCREW	3	
19	575543314	SCREW	4	
20	548021201	SKÆRESKIVE	1	Cutting disc
21	548810501	LEJEHUS KPL.	1	Bearing housing assy
22	546639002	CUTTING DISC ASSY	1	Cutting disc assy
23	590508701	SCREW	3	
24	575543314	SCREW	3	
25	599535101	HOLDER	1	
26	546571701	FRIKTIONSPLADE	1	Skidplate
27	547159801	HAT	1	
28	547159701	STØTTE	1	
29	580682901	TOOL HOLDER	1	
30	548493101	BUSHING	1	
31	546688902	LEDNING KPL	1	Wiring assy Height adjustment motor

AUTOMOWER 560 EPOS
WHEELS AND TIRES

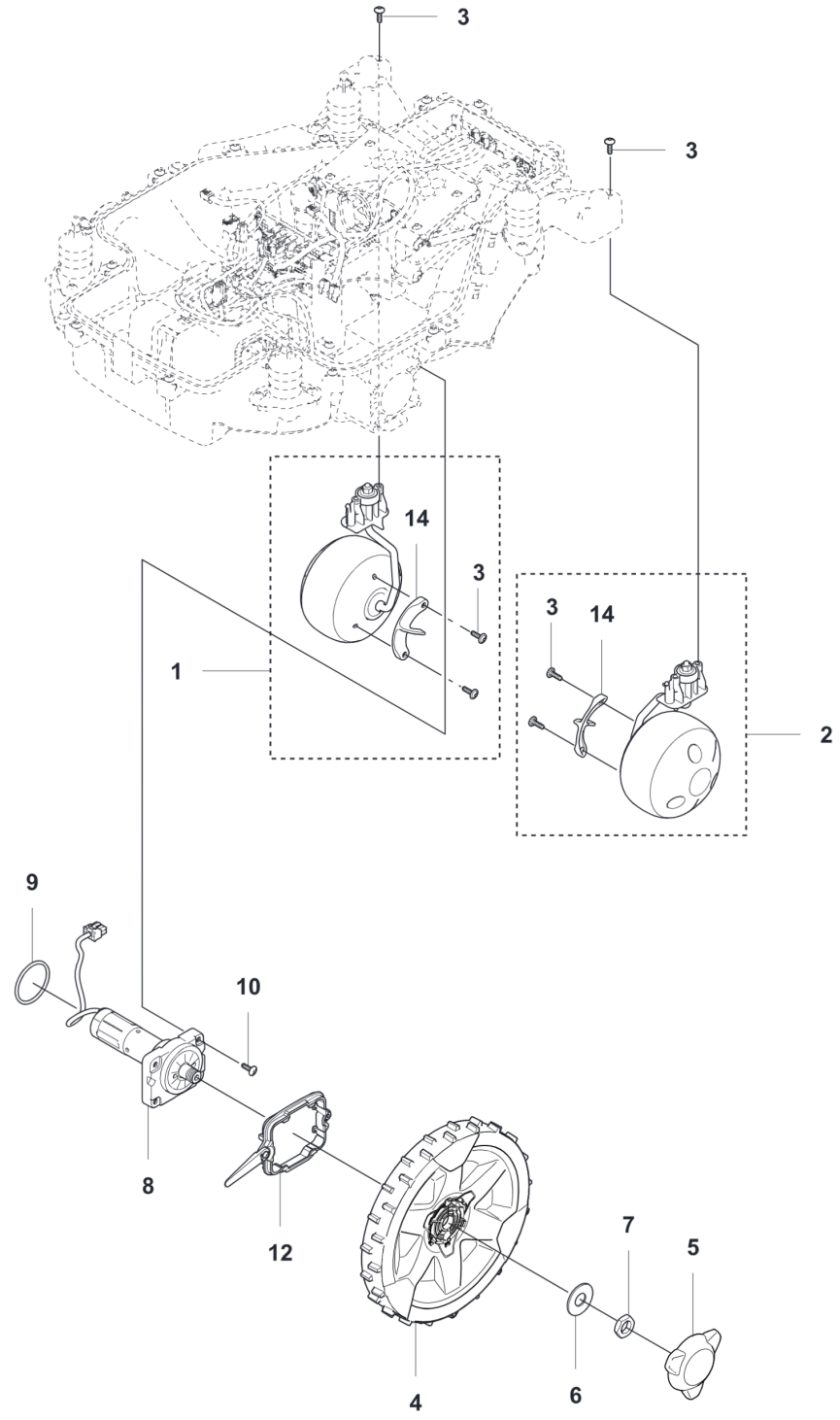

Reference	Artikelnummer	Varenavn	Antal	Kommentar
1	546572001	HJUL KPL	1	Support wheel assy left
2	547634801	HJUL KPL	1	Support wheel assy right
3	574450101	SKRUE ITXPANT	6	
4	582280207	WHEEL KIT	2	Rear wheel
5	579505503	NAVKAPSEL	2	
6	586210601	SKIVE	2	
7	731432401	HEXAGON TYND	2	
8	546282801	WHEEL MOTOR ASSY	2	Wheel motor
9	580443902	O-RING	2	
10	574450101	SKRUE ITXPANT	8	
14	548292501	SKRABER	2	

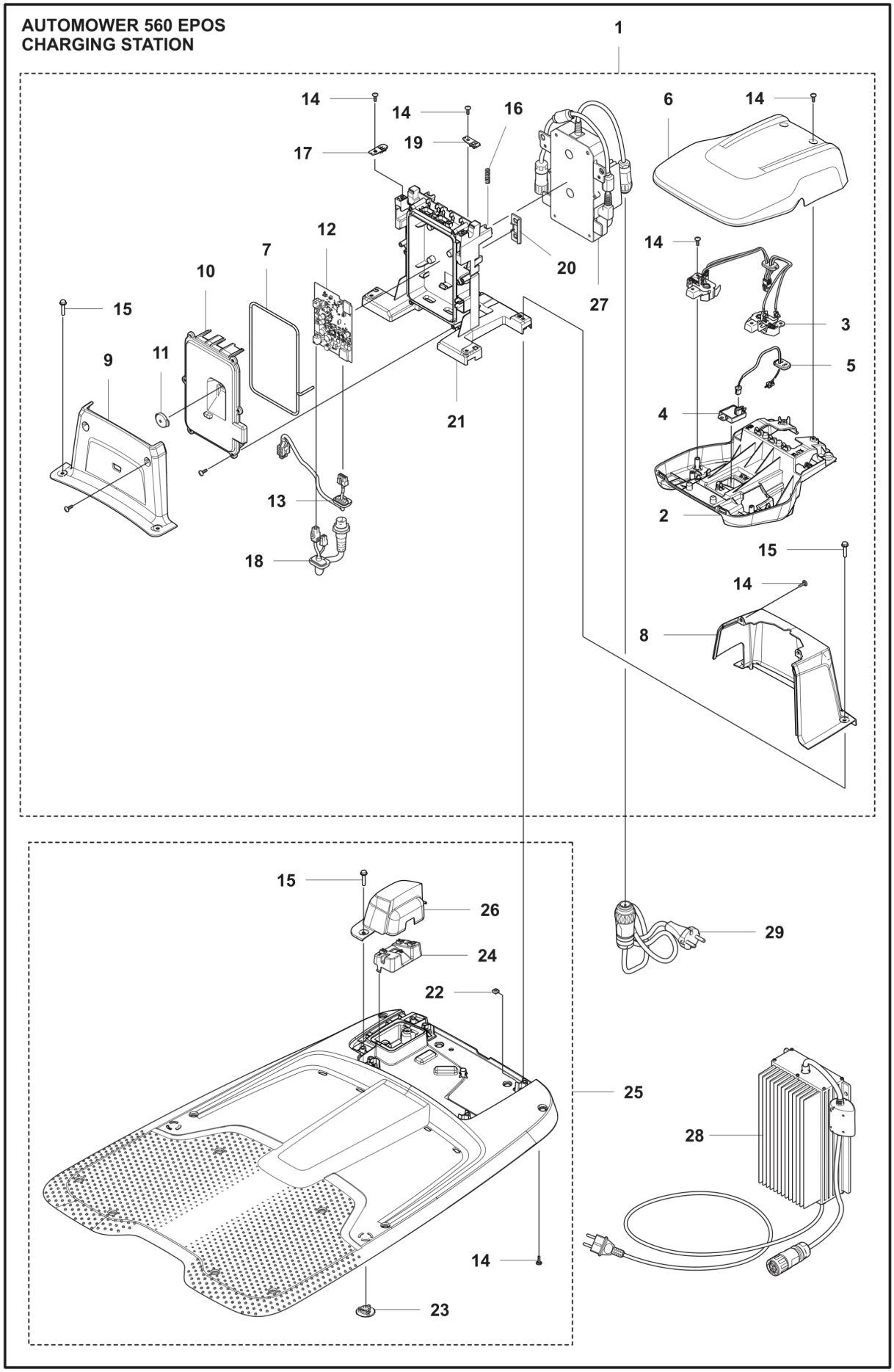
AUTOMOWER 560 EPOS
CHARGING STATION
1
14
14
16
6
14
17
19
12
7
10
20
27
14
15
3
9
11
5
4
21
13
2
18
15
14
8
15
26
29
24
22
25
28
14
23

Reference	Artikelnummer	Varenavn	Antal	Kommentar
1	540624201	CHARGING TOWER	1	Complete charging tower incl smart PSU. EU, UK, IE, CH, AUS, NZ
2	546869301	RAMME	1	
3	546913801	LEDNING KPL	1	
4	599476401	HUS KPL	1	Magnetic sensor circuit board
5	546700001	LEDNING KPL	1	
6	546868901	HAT	1	
7	574874722	TÆTNINGSLISTE	1	
8	546869501	HUS	1	Tower back
9	546869601	HUS	1	Tower front
10	546869701	DÆKSEL	1	
11	546282401	HAT	1	
12	546326502	KREDSKORT	1	Charging station circuit board. To be used with non-smart PSU 5484093-0X
12	546326503	KREDSKORT	1	Charging station circuit board. To be used with smart PSU 5466528-0X
13	546913901	LEDNING KPL	1	
14	574450101	SKRUE ITXPANT	17	

15	547620001	BOLT	8	
16	547597101	FJEDER	2	
17	547156001	FÆSTE	2	
18	547104701	LEDNING KPL	1	L=258mm. To be used with smart PSU 5466528-0X
18	548480101	LEDNING KPL	1	L=2m. To be used with non-smart PSU 5484093-0X
19	547156001	FÆSTE	1	To be used with smart PSU 5466528-0X
19	548520801	OVERFALD	1	To be used with non-smart PSU 5484093-0X
20	548520901	SHIMS	1	To be used with non-smart PSU 5484093-0X
21	546869801	STATIV	1	
22	503226601	MØTRIK 4-KANTET	6	
23	599436301	KOBLING	2	
24	547586001	BRO	1	
25	541708401	BASE PLATE ASSY	1	Base plate assy
26	546870201	LEM	1	
27	546652801	POWER SUPPLY UNIT	1	EU, UK, IE, CH, AUS, NZ, smart PSU
28	548409301	POWER SUPPLY UNIT	1	EU, non-smart PSU
28	548409302	POWER SUPPLY UNIT	1	UK, IE, non-smart PSU

28	548409303	POWER SUPPLY UNIT	1	CH, non-smart PSU
28	548409304	POWER SUPPLY UNIT	1	US, CA, non-smart PSU
28	548409305	POWER SUPPLY UNIT	1	AUS, NZ, non-smart PSU
29	598973301	LEDNING KPL	1	EU. To be used with smart PSU 5466528-0X
29	598973302	LEDNING KPL	1	UK, IE. To be used with smart PSU 5466528-0X
29	598973303	LEDNING KPL	1	CH. To be used with smart PSU 5466528-0X
29	598973305	LEDNING KPL	1	AUS, NZ. To be used with smart PSU 5466528-0X

AUTOMOWER 540 EPOS, 560 EPOS, 580 EPOS, 580L EPOS
INSTALLATION ACCESSORIES

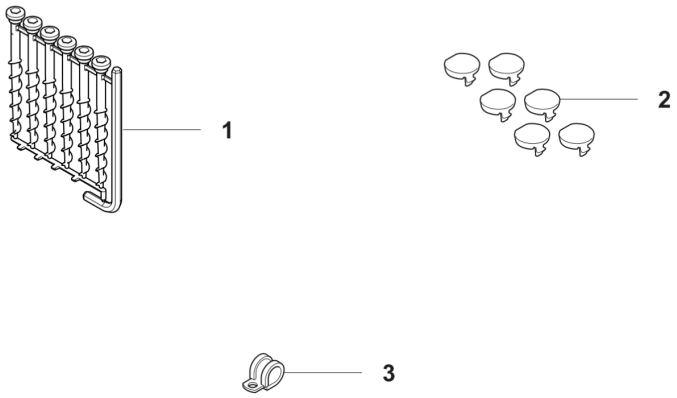

Reference	Artikelnummer	Varenavn	Antal	Kommentar
1	597435801	SCREW	1	Anchor screws, 6pcs
2	547637901	PROP	1	6 pack
3	538635501	OVERFALD	1	Cable Holder
4	541107201	KOFANGER	1	Rough terrain rear bumper kit