2026-11-17

Husqvarna Automower® 450V NERA



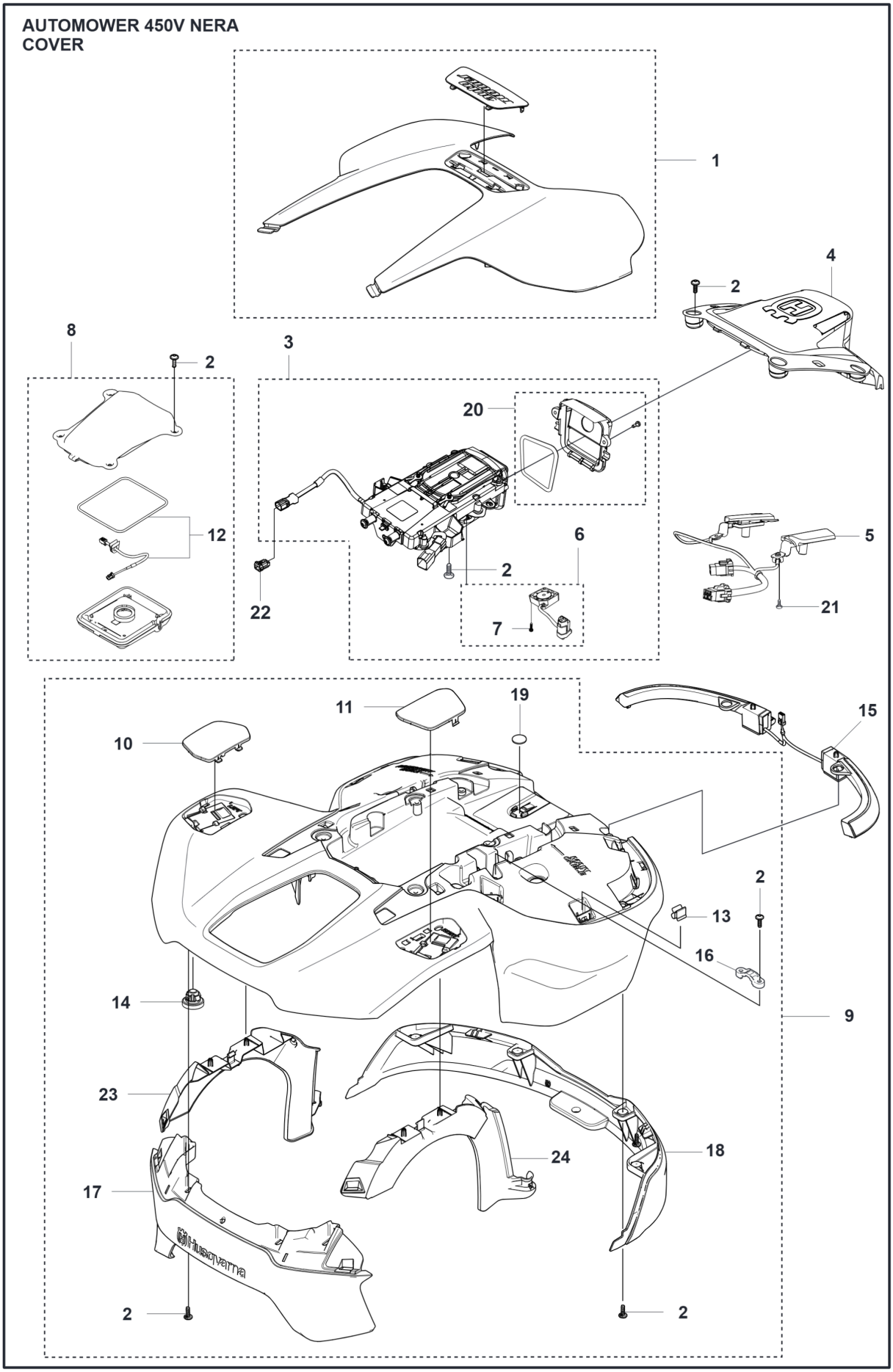
AUTOMOWER 450V NERA
COVER
1
2
4
8
2
3
20
12
2
6
22
7
5
21
11
19
15
10
2
13
16
14
9
23
24
18
17
2
2

Reference	Artikelnummer	Varenavn	Antal	Kommentar
1	540197001	COVER ASSY	1	Top Cover kit
2	574450101	SKRUE ITXPANT	26	Screw
3	548163701	VISION MODULE	1	Vision module
4	548738801	HUS	1	Housing
5	547498301	LEDNING KPL	1	Charging plate with cable
6	541225601	MOTOR KIT	1	Fan motor kit
7	540450001	SCREW	3	Screw
8	970862301	EPOS MODULE	1	EU
8	970862306	EPOS MODULE	1	NZ
8	970862307	EPOS MODULE	1	AU
8	970862308	EPOS MODULE	1	JP
9	538876402	BODY KIT	1	Body kit
10	531256801	DÆKSEL	1	Cover Wheel brush Left
11	531256901	DÆKSEL	1	Cover Wheel brush Right
12	547340401	LEDNING KPL	1	Kit, wiring assy + seal
13	593778401	KLEMME	6	Clip

14	546632301	KOBLING	4	Snap locking
15	531189901	LEDNING KPL	1	LED lights
16	593355202	OVERFALD	1	Clamp
17	531256501	KOFANGER	1	Rear bumper
18	531256401	KOFANGER	1	Front bumper
19	593822101	MAGNET	1	Magnet
20	540197101	DÆKSELSÆT	1	Cover front kit
21	575529502	SKRUE ITXPANTT	2	Screw
22	536464501	TÆTNINGSPROP	1	Sealing plug
23	531257501	DÆKSEL	1	
24	531257601	DÆKSEL	1	

AUTOMOWER 450V NERA
CONSOLE

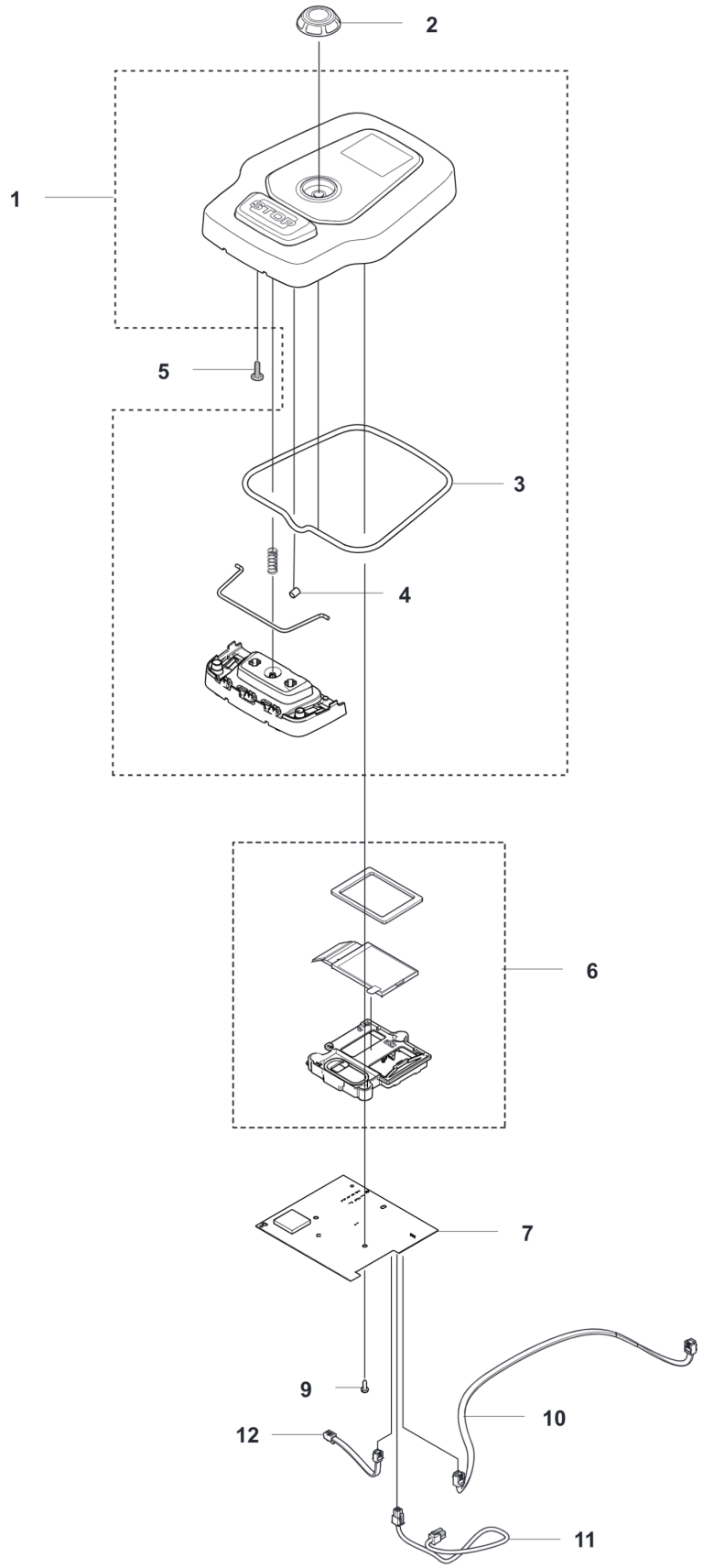

Reference	Artikelnummer	Varenavn	Antal	Kommentar
1	548084702	DÆKSELSÆT	1	Cover kit
2	531375901	KNOP	1	Jog Wheel
3	599911803	TÆTNING	1	Sealing strip
4	598460901	MAGNET	1	Ø8 L=10
5	574450101	SKRUE ITXPANT	4	Screw
6	538822401	DISPLAY KIT	1	Display
7	599702701	KREDSKORT	1	Application circuit board
9	525887402	SCREW CITXPANT	3	Screw
10	536253905	LEDNING KPL	1	Wiring Assy Magnetic sensor
11	591203104	LEDNING KPL	1	Wiring Assy Application board
12	536253901	LEDNING KPL	1	Wiring Assy Communication circuit board

AUTOMOWER 450V NERA
CHASSIS UPPER

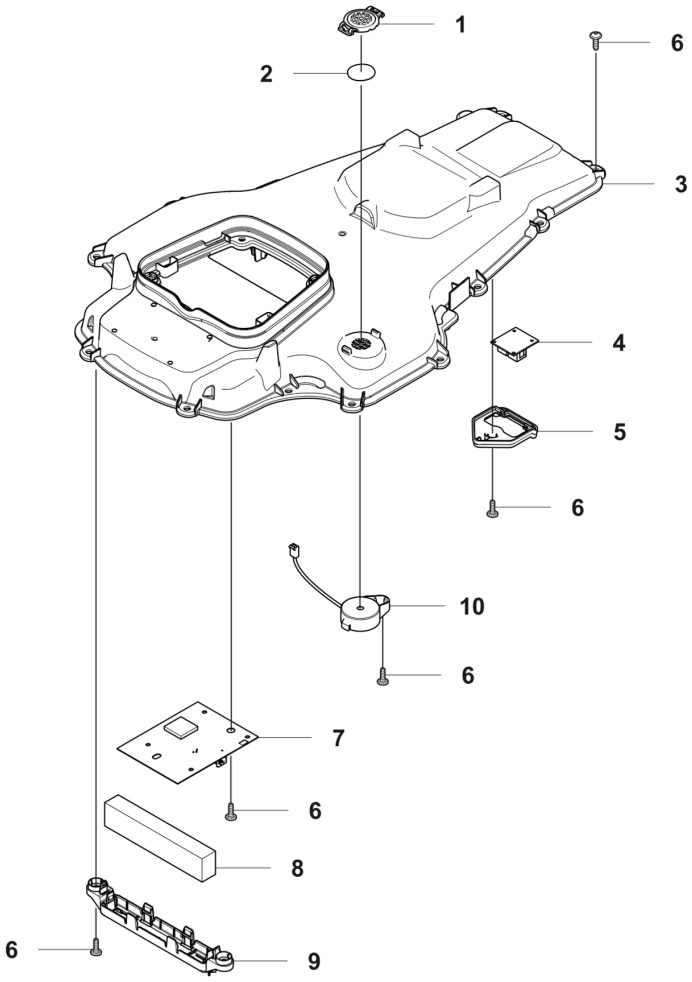

Reference	Artikelnummer	Varenavn	Antal	Kommentar
1	586038902	DÆKSEL	1	Cover air filter
2	577753701	LUFTFILTER	1	Air Filter
3	599909801	CHASSIS	1	Chassis Upper
4	591125501	KREDSKORT	1	Magnetic Sensor Circuit Board
5	535563901	HOLDER	1	Holder Magnetic Sensor Circuit Board
6	574450101	SKRUE ITXPANT	20	Screw
7	536462903	KREDSKORT	1	Communication circuit board, CBT10
8	598503602	VÆGT	1	Weight
9	531352801	HOLDER	1	Weight holder
10	531351801	LEDNING KPL	1	Buzzer

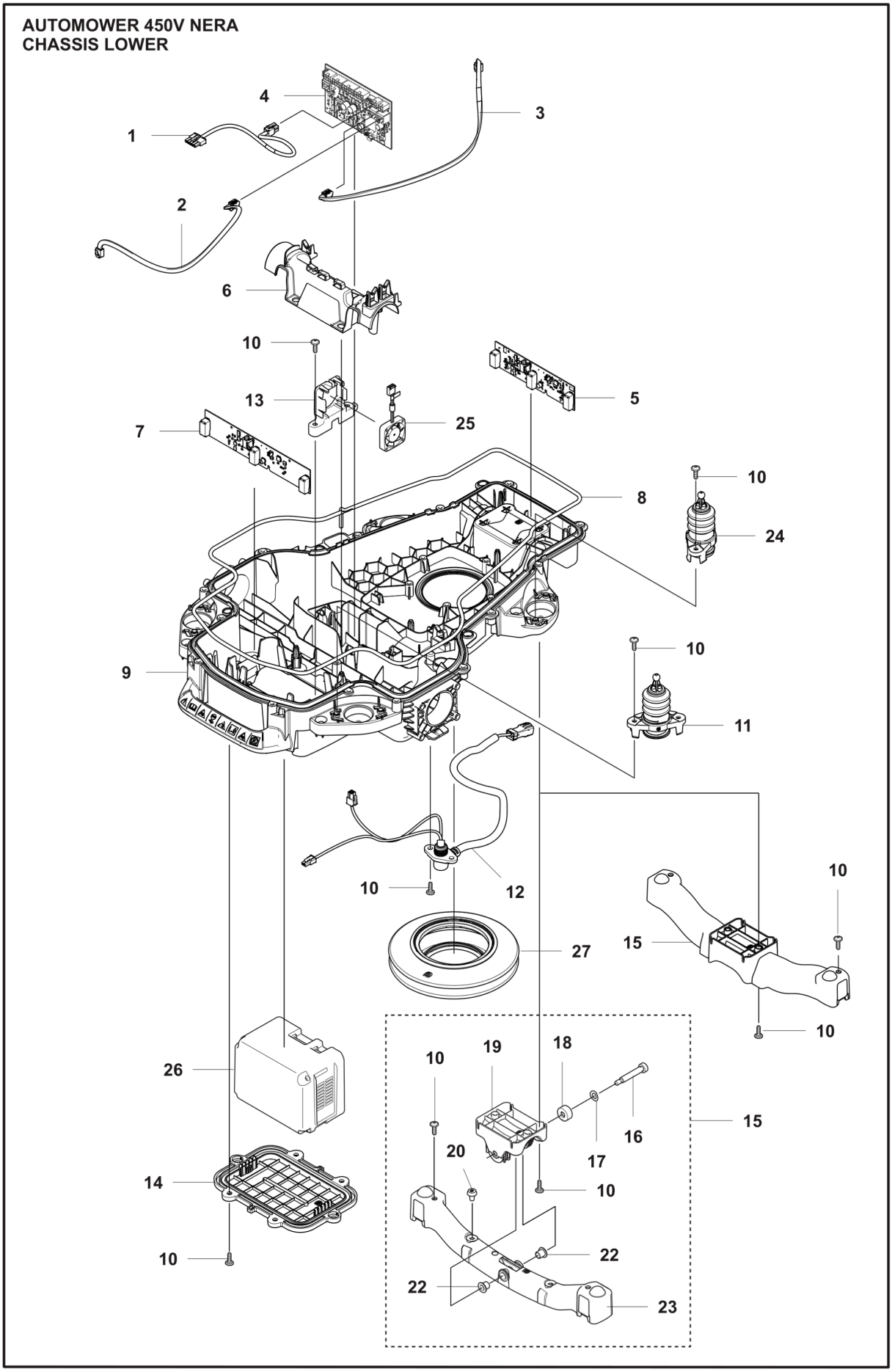
AUTOMOWER 450V NERA
CHASSIS LOWER
4
1
3
2
6
10
13
25
5
7
10
8
24
9
10
11
10
12
10
15
27
10
26
10
19
18
15
16
20
17
10
14
22
10
22
23

Reference	Artikelnummer	Varenavn	Antal	Kommentar
1	535280507	LEDNING KPL	1	Wiring Assy Battery
2	536253909	LEDNING KPL	1	Wiring Assy Loop rear
3	536253904	LEDNING KPL	1	Wiring Assy Loop front
4	591125602	KREDSKORT	1	Motor contol circuit board
5	546001101	KREDSKORT	1	Loop sensor circuit board front
6	531226601	FÆSTE	1	Cable holder
7	546007101	KREDSKORT	1	Loop sensor circuit board rear
8	574874720	TÆTNINGSLISTE	1	Sealing Strip
9	599910101	CHASSIS	1	Chassis lower
10	574450101	SKRUE ITXPANT	27	Screw
11	531281301	JOYSTICK ASSY	2	Joystick Rear Collision
12	531189503	LEDNING KPL	1	Main Cable
13	536651501	HOLDER	1	Holder Cooling Fan
14	599987301	DÆKSEL	1	Battery Cover
15	535279802	SHAFT SYSTEM	1	Pivoting, Standard, Terrain
15	540337001	BJÆLKE	1	Fixed, Optional, Robust

16	536389301	SCREW	1	Screw
17	547538301	AFSTANDSRING	1	Washer
18	531260501	BUSHING	1	Bushing
19	599910301	FÆSTE	1	Bracket
20	535293701	BØSNING	2	Damper
22	535293801	BUSHING	2	Bushing
23	599910202	BJÆLKE	1	Pivoting shaft
24	531281201	JOYSTICK ASSY	1	Joystick Front Lift & Collision
25	536771601	FAN MOTOR	1	Cooling fan
26	531293701	BATTERY	1	Battery
27	599318301	BÆLG	1	Bellows

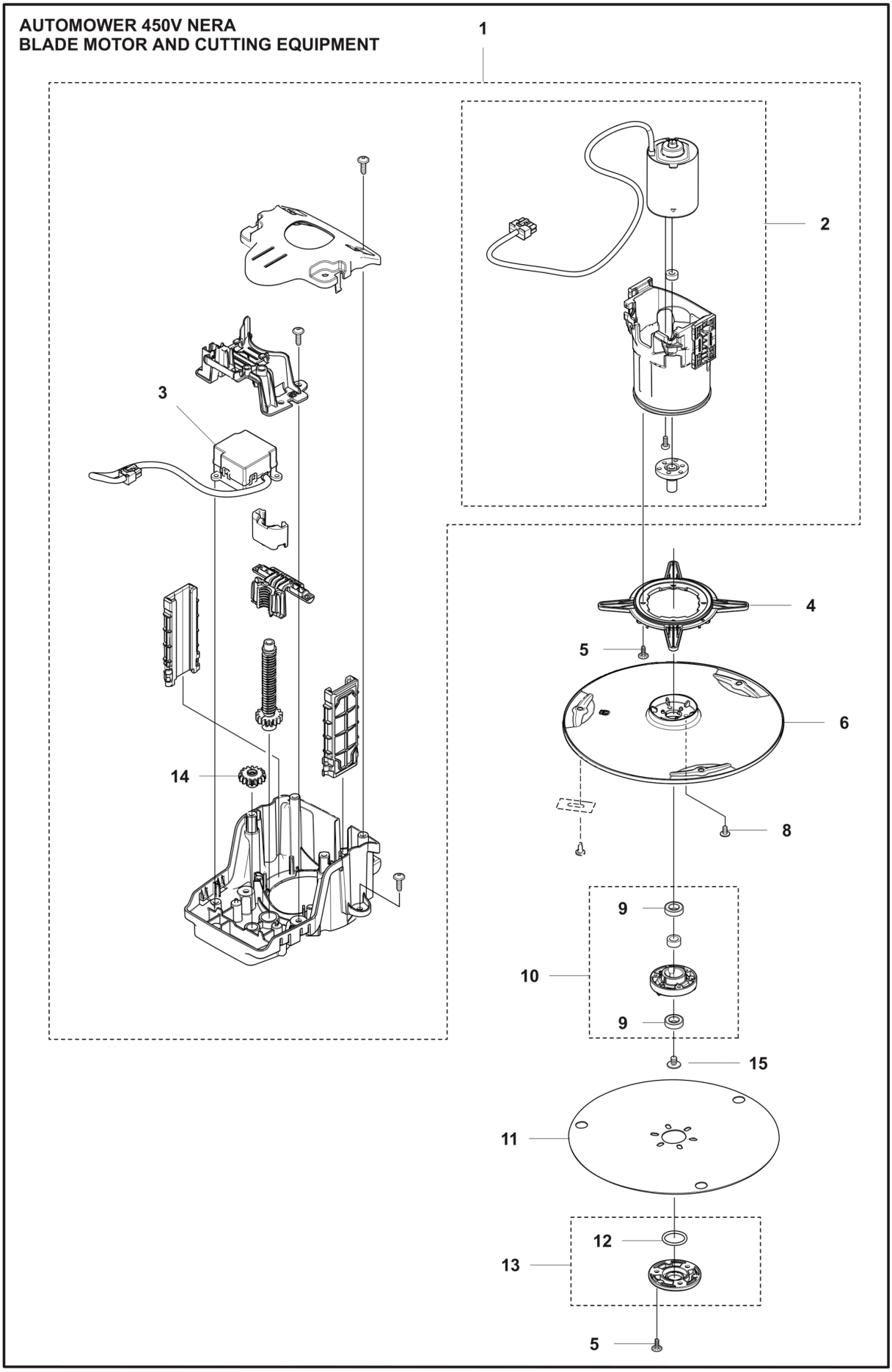
AUTOMOWER 450V NERA
BLADE MOTOR AND CUTTING EQUIPMENT
1
2
3
4
5
6
8
9
10
9
15
11
12
13
5
14

Reference	Artikelnummer	Varenavn	Antal	Kommentar
1	538876702	CUTTING MODULE	1	Cutting module
2	531260902	CUTTER MOTOR ASSY	1	Cutting motor
3	592735803	HEIGHT ADJUSTMENT MOTOR	1	Cutting height adjustment motor
4	531279001	RAMME	1	Frame
5	575543314	SCREW	7	Screw
6	599674701	SKÆRESKIVE	1	Blade disc
8	590508701	SCREW	1	Screw
9	535075703	KUGLELEJE	2	Ball bearing
9	593080801	KUGLELEJE	1	Ball bearing, Tube 50pcs
10	588421702	LEJEHUS KPL.	1	Bearing housing assy
11	598794901	FRIKTIONSPLADE	1	Skid plate
12	585297501	O-RING	1	O-ring
13	587449601	DÆKSELSÆT	1	Bearing cover
14	599317601	TANDHJUL	1	Gear wheel
15	535076001	SCREW	1	

AUTOMOWER 450V NERA
WHEELS AND TIRES

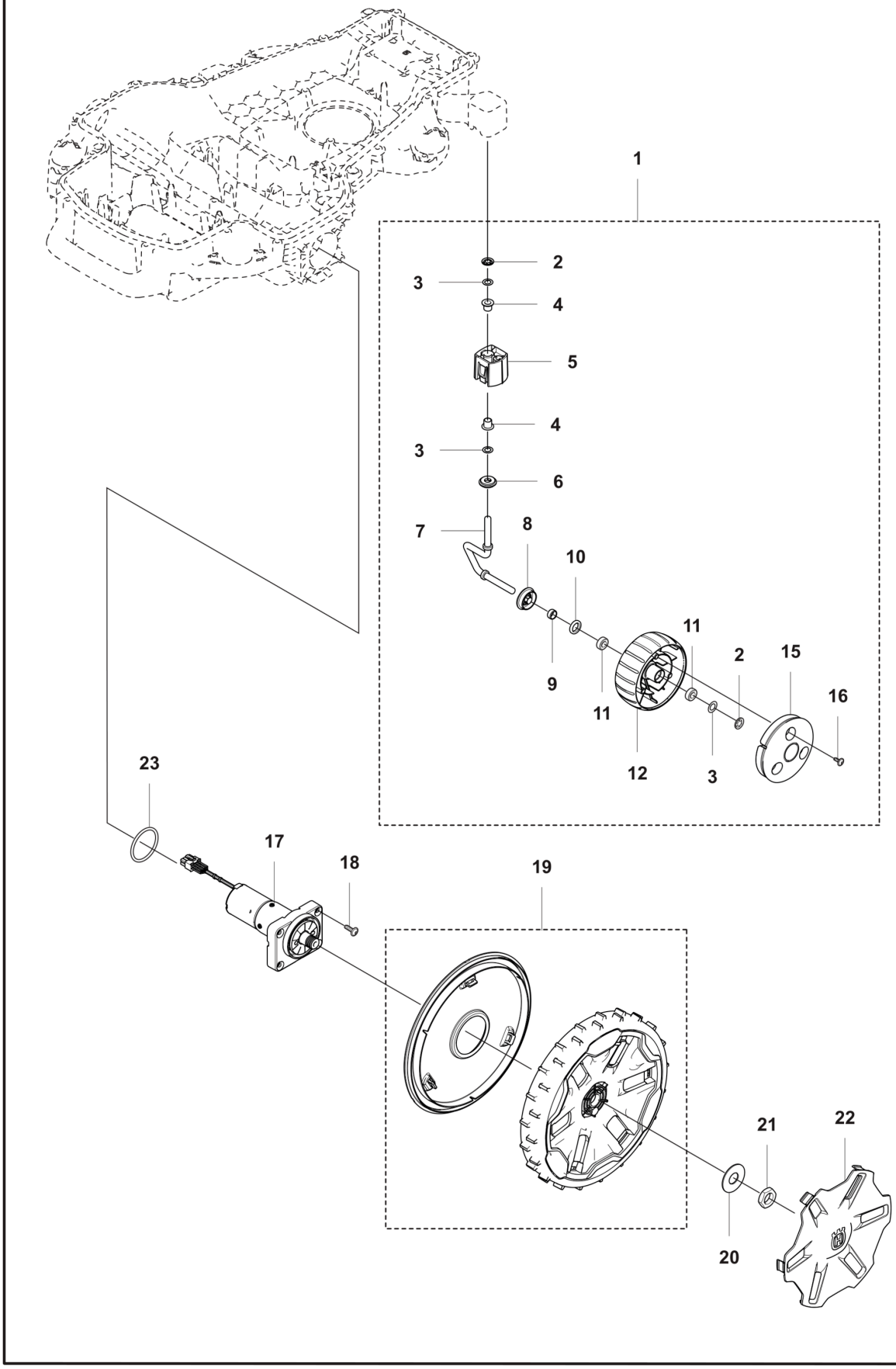

Reference	Artikelnummer	Varenavn	Antal	Kommentar
1	536119703	HJUL KPL	2	Front wheel assy
2	576019302	LÅSESKIVE	4	Washer
3	580764601	SKIVE	6	Washer
4	535293801	BUSHING	4	Bushing
5	531264301	UDTAG	2	Socket
6	536661901	SKÆRM	2	Shield
7	531263302	SPINDEL	1	Spindle
8	531264201	SKÆRM	2	Shield
9	580412001	MUFFE	1	Sleeve
10	580487101	TÆTNING	2	Sealing
11	597795601	KUGLELEJE	1	Tube 50pcs
11	580605101	KUGLELEJE	4	Ball bearing
12	531344201	HJUL	2	Tire
15	531344401	HJUL	2	Wheel outside
16	575543314	SCREW	6	Screw
17	599659302	WHEEL MOTOR ASSY	1	Wheel motor from

18	574450101	SKRUE ITXPANT	8	Screw
19	538816501	HJUL KPL	2	Rear wheel
20	586210601	SKIVE	1	Washer
21	731432401	HEXAGON TYND	2	Nut
22	531356502	NAVKAPSEL	2	Hub Cap
23	580443902	O-RING	2	O-ring

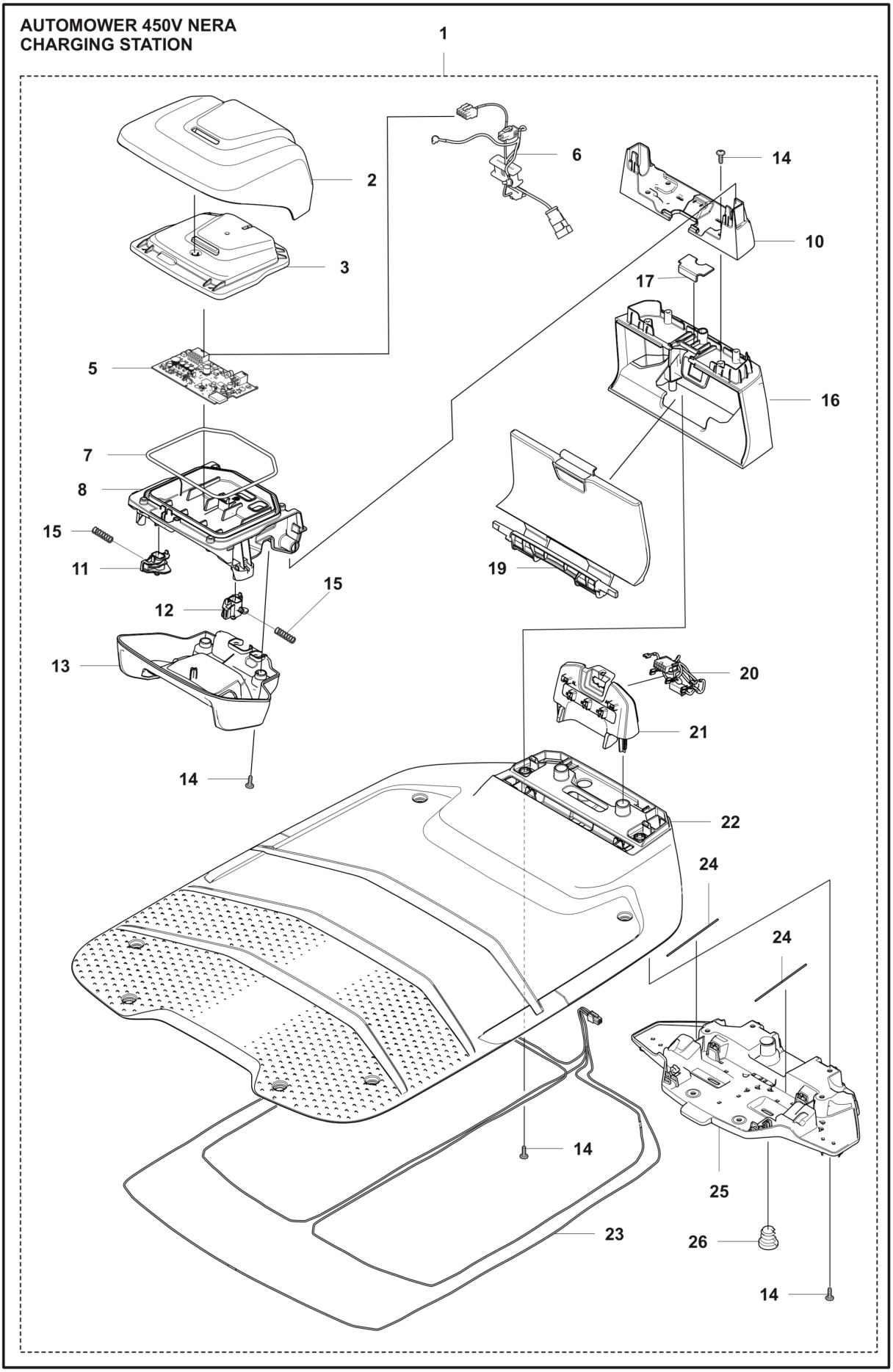
AUTOMOWER 450V NERA
CHARGING STATION
1
2
3
5
6
7
8
10
11
12
13
14
15
16
17
19
20
21
22
23
24
25
26

Reference	Artikelnummer	Varenavn	Antal	Kommentar
1	531422302	LADESTATION	1	Charging station
2	531422502	HAT	1	Upper Cover
3	531422902	DÆKSEL	1	Lid
5	529899501	KREDSKORT	1	Charging station circuit board
6	536055201	LEDNING KPL	1	Wiring Assy CS Main
7	574874708	TÆTNINGSLISTE	1	Sealing strip
8	531423002	RAMME	1	Frame
10	535558603	STØTTE	1	Support
11	531422601	KLAP	1	Contact Plate Left
12	531422602	KLAP	1	Contact Plate Right
13	531422701	HYLSTER	1	Lower Cover
14	574450101	SKRUE ITXPANT	12	Screw
15	535130101	FJEDER	2	Spring
16	531422401	HUS	1	Housing
17	536177201	DÆKSEL	1	Lid
19	531422802	LEM	1	Hatch

20	535600701	LEDNING KPL	1	Wiring Assy Antenna bridge
21	535600601	HUS	1	Cable Holder
22	531423103	BASEPLATE	1	Charging Station Baseplate
23	536166001	LEDNING KPL	1	Wiring Assy Baseplate
24	588470201	FJEDER	2	Spring
25	535600501	ANKERPLADE	1	Baseplate Support
26	531262701	PROP	1	Plug

AUTOMOWER 450V NERA
INSTALLATION ACCESSORIES

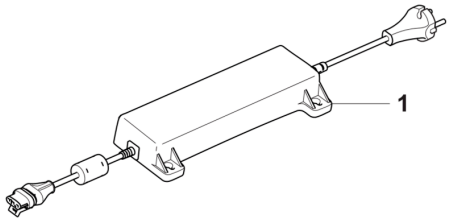

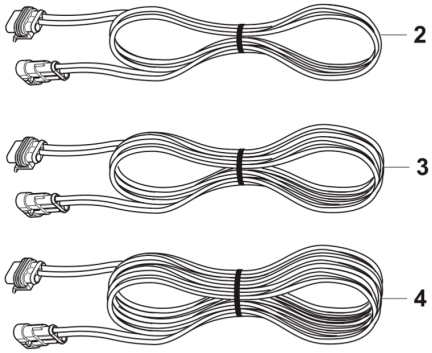

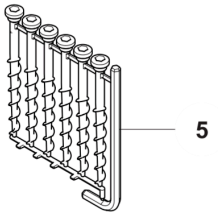

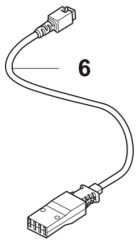

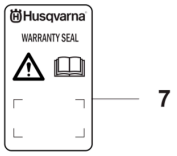



Reference	Artikelnummer	Varenavn	Antal	Kommentar
1	547307001	POWER SUPPLY UNIT	1	Power unit EU
1	547307002	POWER SUPPLY UNIT	1	Power unit UK
1	547307003	POWER SUPPLY UNIT	1	Power unit CH
1	547307005	POWER SUPPLY UNIT	1	Power unit AU, NZ
1	547307006	POWER SUPPLY UNIT	1	Power unit JP
2	588765006	KABLAGE KPL	1	Low Voltage Cable 3 m
3	588765005	KABLAGE KPL	1	Low Voltage Cable 10 m
4	588765004	KABLAGE KPL	1	Low Voltage Cable 20 m
5	597435801	SCREW	1	Anchor screws, 6pcs
6	598013101	LEDNING KPL	1	Battery tester cable
7	580689502	MÆRKAT	1	Warranty seal
8	546137702	MÆRKAT	1	Warranty seal