2026-11-02

Husqvarna Automower® 415X



A AUTOMOWER 415X COVER

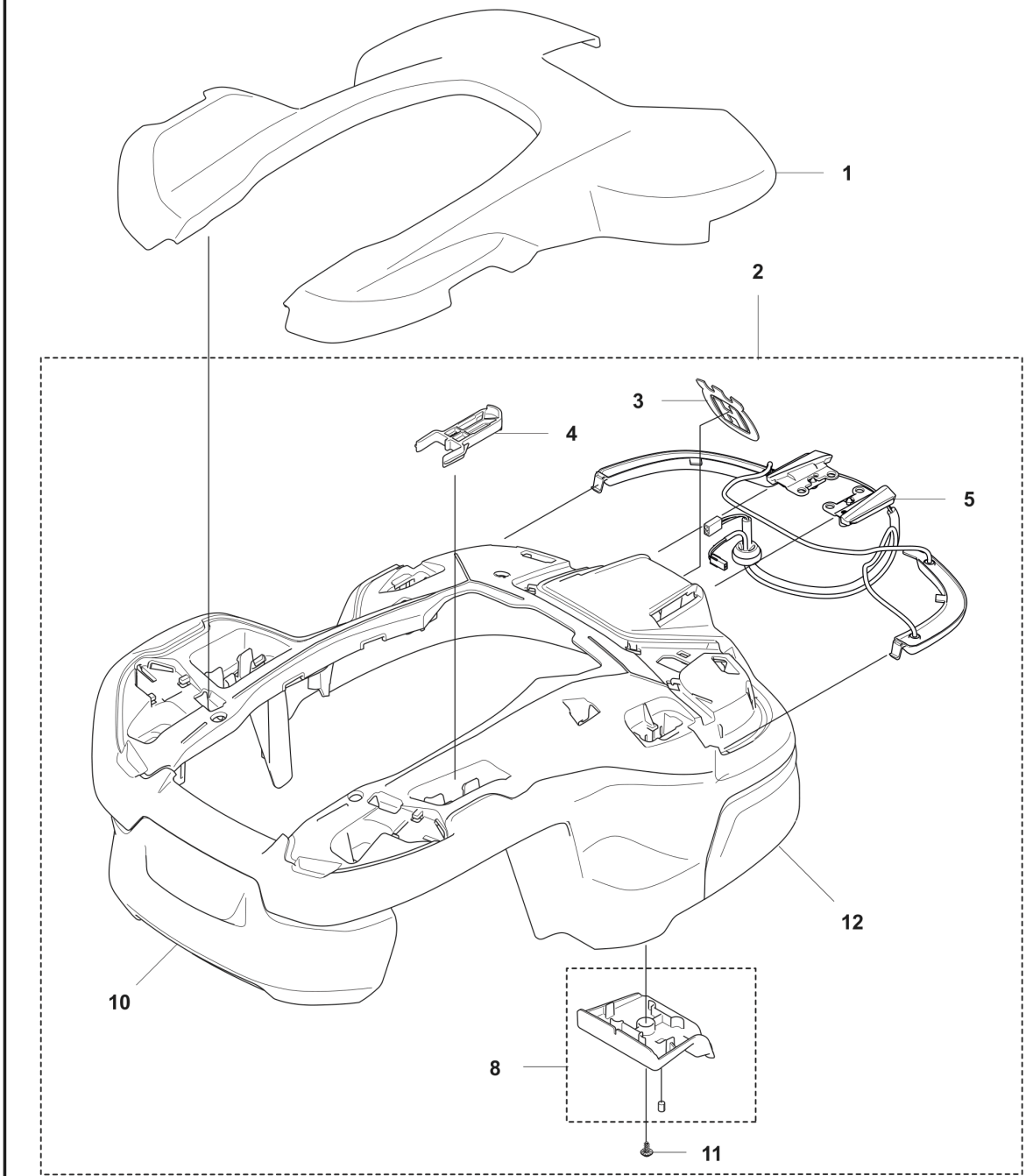

Reference	Artikelnummer	Varenavn	Antal	Kommentar
1	529461301	BODY KIT	1	Cover KIT Top White
1	529461302	BODY KIT	1	Cover KIT Top Orange
1	529461303	BODY KIT	1	Cover KIT Top Grey
2	599988701	BODY KIT	1	
3	587423501	MÆRKAT	1	
4	598764201	GAFFEL	1	
5	599490401	LEDNING KPL	1	
8	599991001	HOLDER KIT	1	
10	599296301	KOFANGER	1	
11	574450101	SKRUE ITXPANT	10	
12	599296201	KOFANGER	1	

AUTOMOWER 415X
CHASSIS UPPER

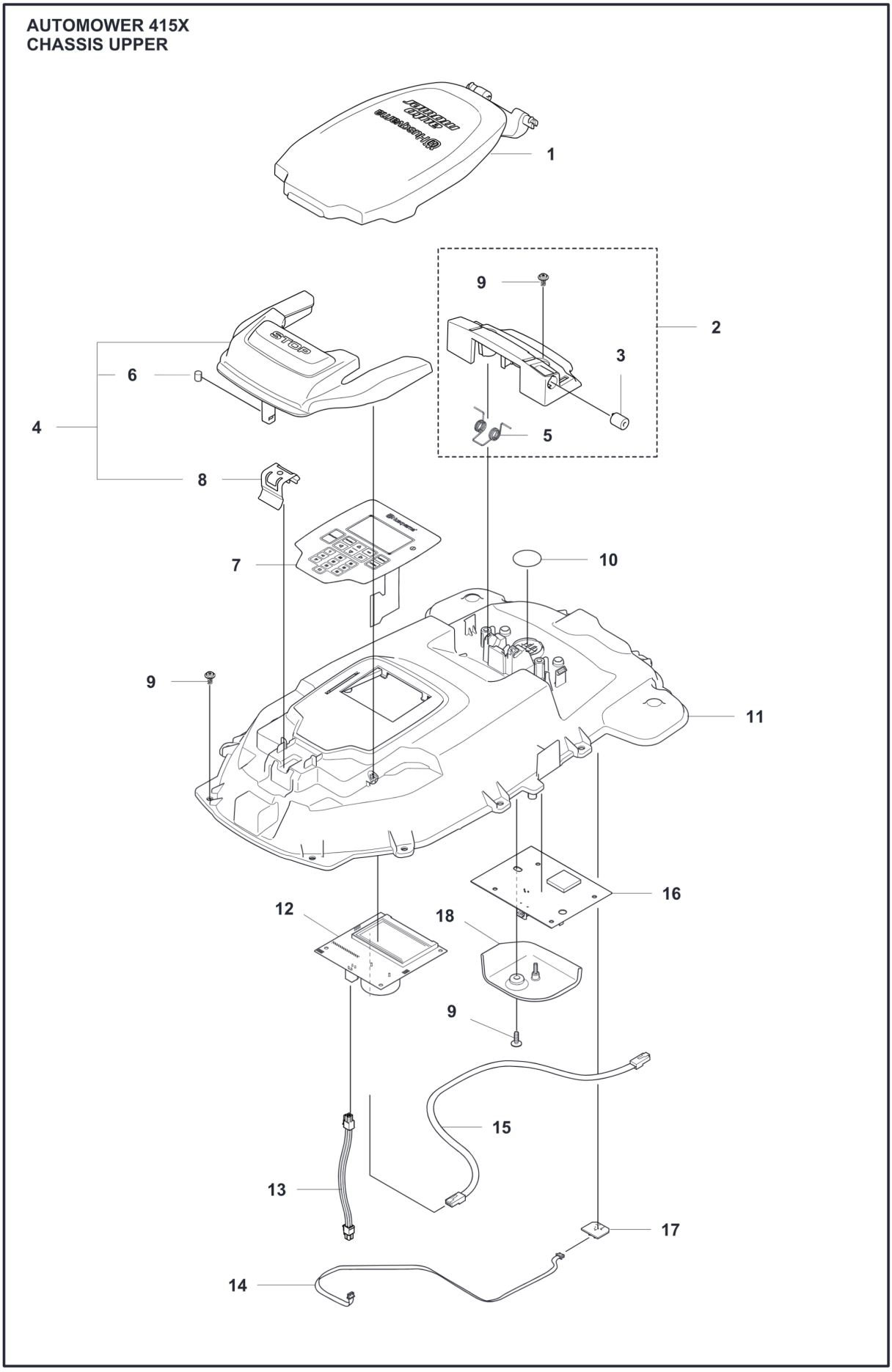

Reference	Artikelnummer	Varenavn	Antal	Kommentar
1	599295903	LEM	1	
2	597758101	STØTTE	1	
3	580352302	BØSNING	1	
4	599991101	BUTTON KIT	1	
5	585255401	DREJEFJEDER	2	
6	598460901	MAGNET	1	
7	599451701	TASTATUR	1	
8	597349502	FJEDER	1	
9	574450101	SKRUE ITXPANT	16	
10	577753701	LUFTFILTER	1	
11	548209501	CHASSIS KIT	1	Kit including Magnetic sensor cable and Modular cable
12	598902801	KREDSKORT	1	Application Board
13	591203101	LEDNING KPL	1	HMI cable. L=250mm
14	599490501	LEDNING KPL	1	Up to S/N 251105250. Magnetic sensor cable.L=500 mm
14	599490502	LEDNING KPL	1	From S/N 251105251. Magnetic sensor cable. L=440 mm

15	536253906	LEDNING KPL	1	Up to S/N 251105250. Modular cable. L=340 mm
15	536253911	LEDNING KPL	1	From S/N 251105251. Modular cable. L=400 mm
16	586662315	GPS MODULE	1	AM Connect Kit
17	598916001	KREDSKORT	1	Magnetic sensor
18	535597201	BESKYTTELSESKAPPE	1	

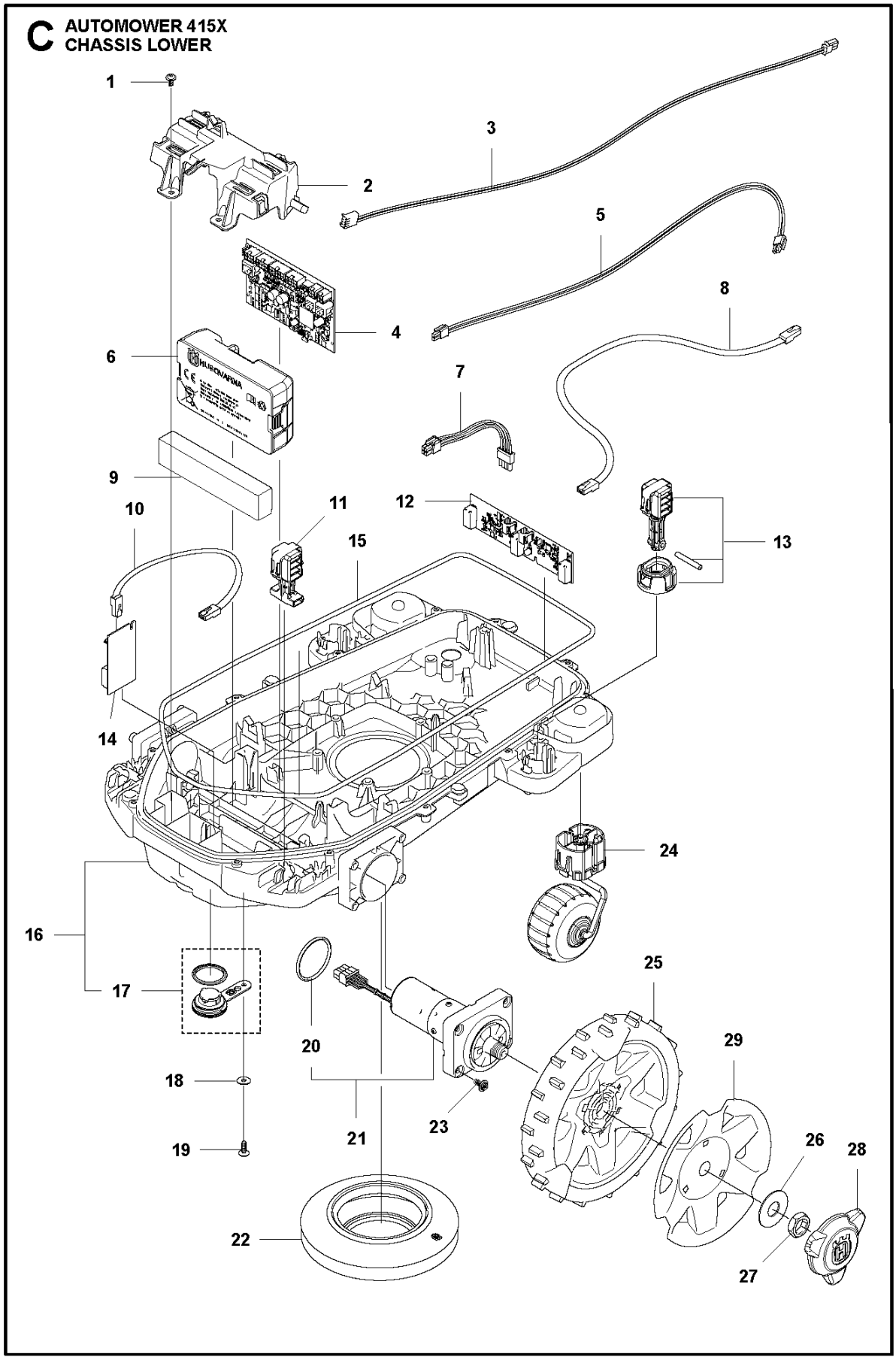
C AUTOMOWER 415X
CHASSIS LOWER
1
2
3
4
5
6
7
8
9
10
11
12
13
14
15
16
17
18
19
20
21
22
23
24
25
26
27
28
29

Reference	Artikelnummer	Varenavn	Antal	Kommentar
1	574450101	SKRUE ITXPANT	11	
2	599295701	OVERFALD	1	
3	588818402	LEDNING KPL	1	
4	591125602	KREDSKORT	1	
5	534993603	LEDNING KPL	1	
6	529452002	BATTERY	1	Battery
6	529452011	BATTERY	1	Battery. For Japan only.
7	535280502	LEDNING KPL	1	Battery cable
8	536253907	LEDNING KPL	1	
9	598503602	VÆGT	1	
10	536253903	LEDNING KPL	1	
11	531339001	STIVER	2	
12	546001101	KREDSKORT	1	
13	596020703	COLUMN ASSY	2	
14	598915201	KREDSKORT	1	
15	574874718	TÆTNINGSLISTE	1	

16	599295602	CHASSIS	1	Lower
17	581621202	PLUG KIT	1	
18	734113741	SKIVE	1	
19	574450101	SKRUE ITXPANT	11	
20	580443902	O-RING	2	
21	598587301	MOTOR KIT	2	
22	599318301	BÆLG	1	
23	574450101	SKRUE ITXPANT	4	
24	547412801	HJUL KPL	2	
25	590217303	HJUL KPL	2	
26	586210601	SKIVE	2	
27	731432401	HEXAGON TYND	2	
28	579505502	NAVKAPSEL	2	
29	590217803	DÆKSEL	2	

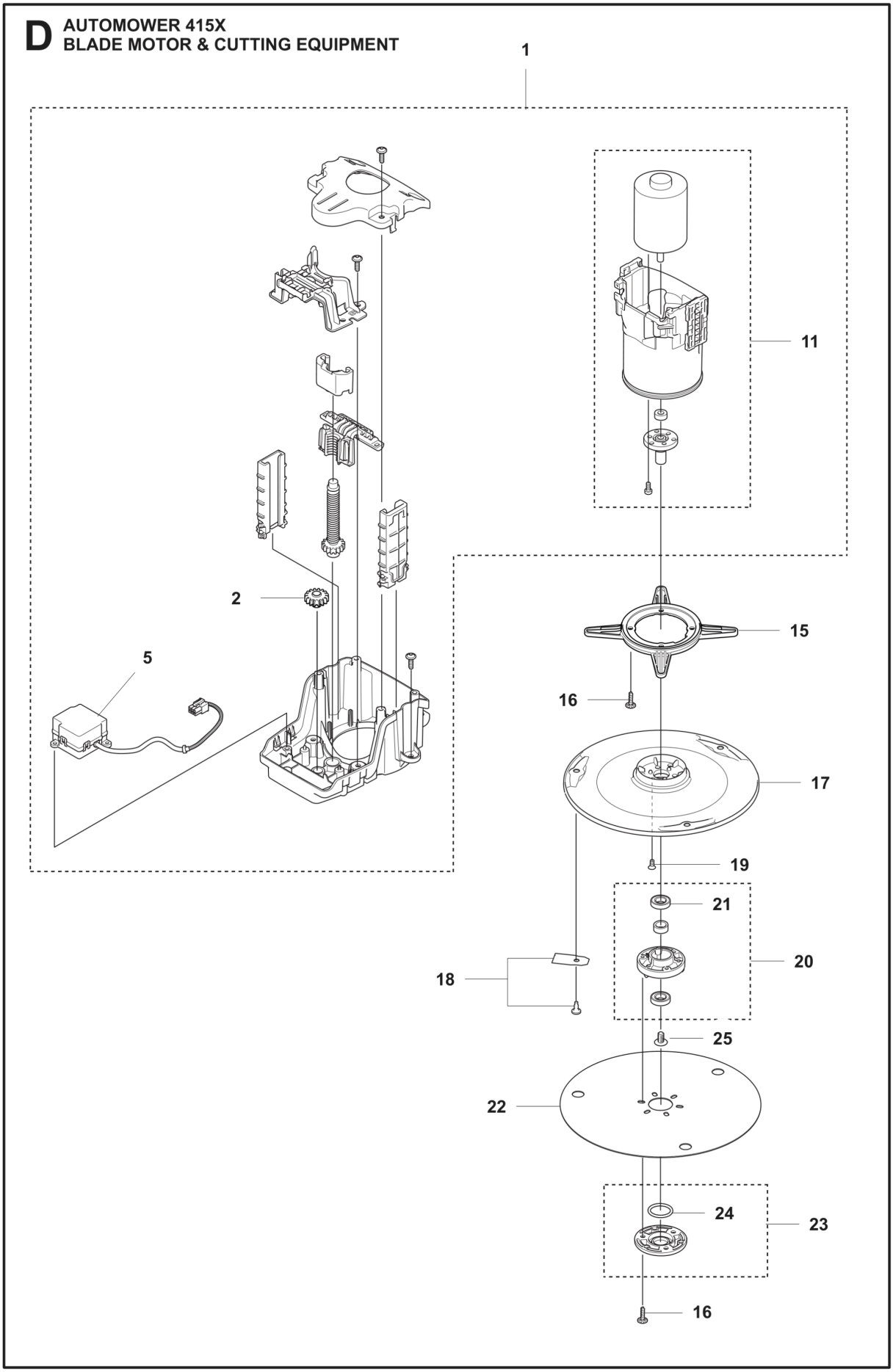
D
AUTOMOWER 415X
BLADE MOTOR & CUTTING EQUIPMENT
1
11
2
5
15
16
17
19
21
20
18
25
22
24
23
16

Reference	Artikelnummer	Varenavn	Antal	Kommentar
1	546838902	CUTTING MODULE	1	Cutting module assy
2	599317601	TANDHJUL	1	
5	592735803	HEIGHT ADJUSTMENT MOTOR	1	HAM
11	599428302	CUTTER MOTOR ASSY	1	
15	599318201	RAMME	1	
16	575543314	SCREW	3	
17	531177401	SKÆRESKIVE	1	
18	595084401	BLADE SET	1	Endurance 6 pcs, Blister
19	590508701	SCREW	3	
20	588421702	LEJEHUS KPL.	1	
21	535075703	KUGLELEJE	2	
21	593080801	KUGLELEJE	2	Tube 50 pcs
22	598794801	FRIKTIONSPLADE	1	
23	587449601	DÆKSELSÆT	1	
24	585297501	O-RING	1	
25	535076001	SCREW	1	

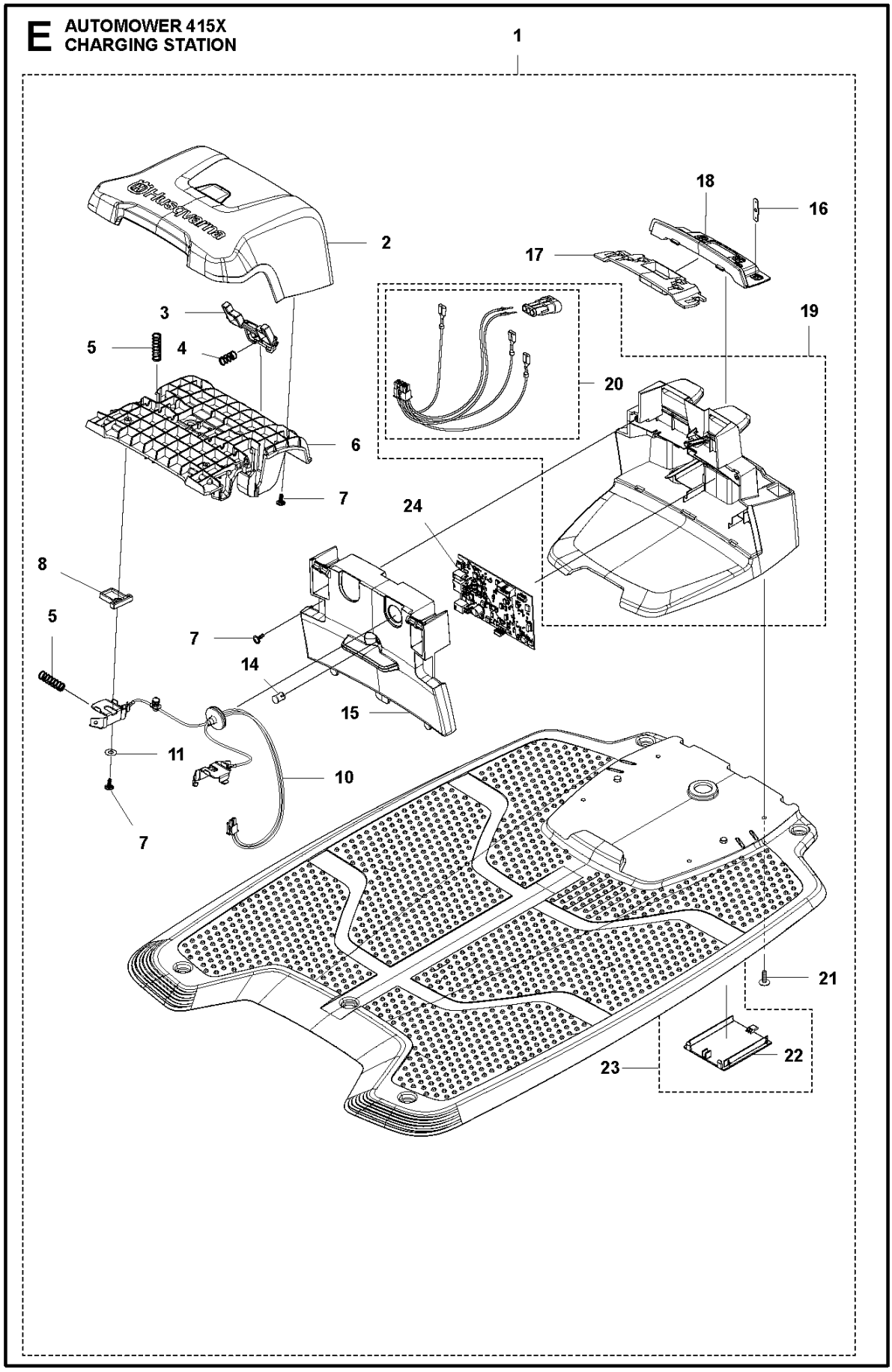
E
AUTOMOWER 415X
CHARGING STATION
1
2
3
4
5
6
7
8
10
11
14
15
16
17
18
19
20
21
22
23
24

Reference	Artikelnummer	Varenavn	Antal	Kommentar
1	585164003	LADESTATION	1	
2	585071102	HAT	1	
3	579462402	KNAP	1	
4	574487001	FJEDER	1	
5	580511401	FJEDER	2	
6	579458004	RAMME	1	
7	575543314	SCREW	12	
8	579460502	AFSTANDSSKIVE	2	
10	531242201	LEDNING KPL	1	Loom Charging Contact
11	734113741	SKIVE	2	
14	590217201	LYGTEGLAS VENSTRE	1	
15	585071401	DÆKSEL	1	
16	580504101	POLSKO	3	
17	579459901	TOOL HOLDER	1	
18	579459801	PLÅT	1	
19	588416101	HUS KPL	1	

20	587651501	KABEL	1
22	585919301	DÆKSEL	1
23	587651602	LADEBLIK	1
24	592909302	KREDSKORT	1

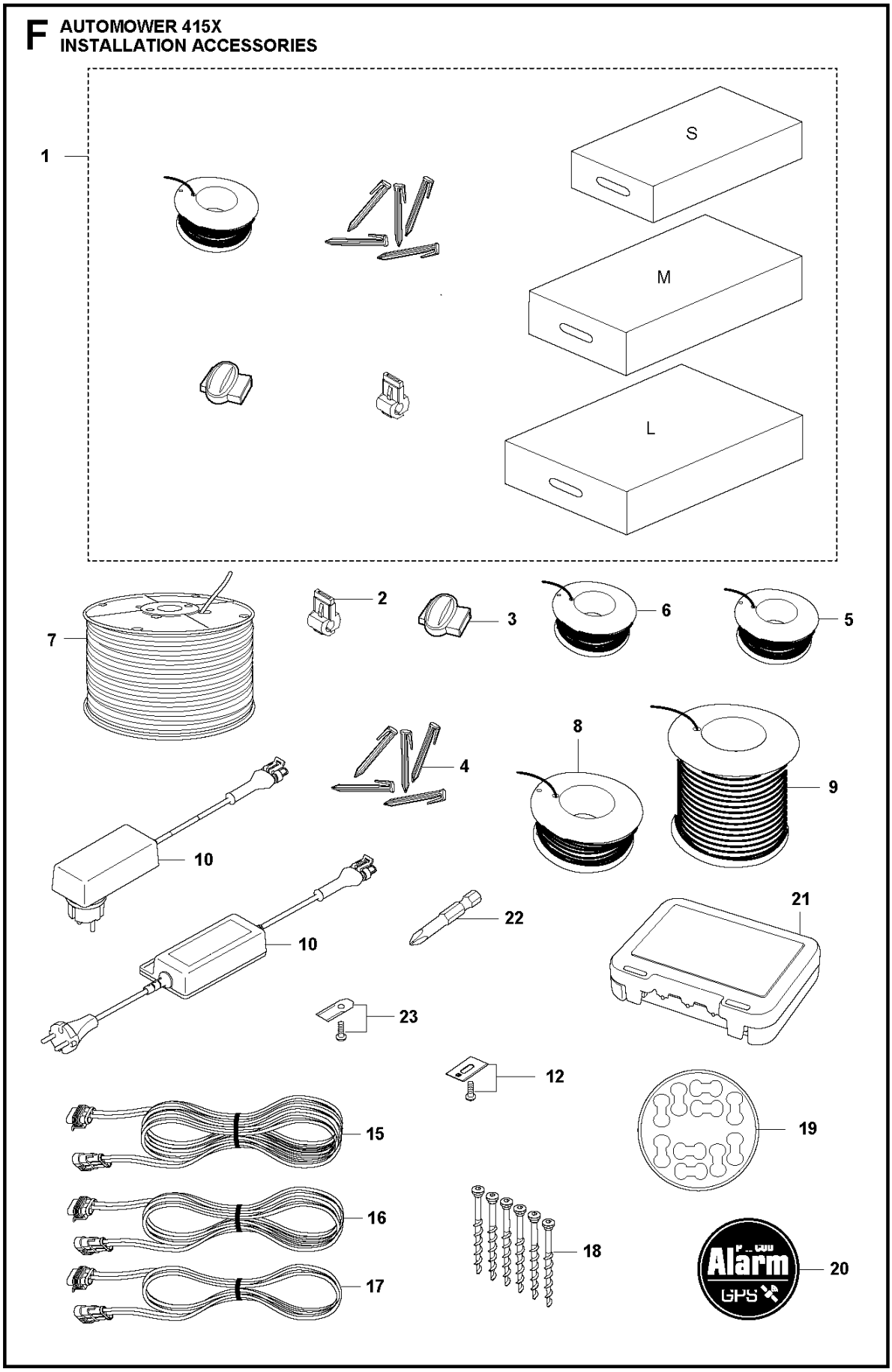
F AUTOMOWER 415X
INSTALLATION ACCESSORIES
1
S
M
L
2
3
4
5
6
7
8
9
10
10
12
15
16
17
18
19
20
21
22
23

Reference	Artikelnummer	Varenavn	Antal	Kommentar
1	967623603	INSTALLATION KIT	1	S Wire 400 m, Staples 600 pc, Connectors 5 pcs, Couplers 5 pcs
1	967972101	INSTALLATION KIT	1	S Wire 150 m, Staples 300 pc, Connectors 3 pcs, Couplers 5 pcs
1	967972201	INSTALLATION KIT	1	M Wire 250 m, Staples 400 pc, Connectors 3 pcs, Couplers 5 pcs
2	535129001	KONTAKT	1	Loop Wire Connector
2	535129002	KONTAKT	1	Loop Wire Connector, Blister Pack 100 pcs
2	577864801	KONTAKT	1	Loop Wire Connector, Blister Pack 5 pcs
3	501980201	KOPPLING	1	Coupler
3	501980203	KOPPLING	1	Coupler, 100 pcs
3	577864701	KOPPLING	1	Coupler, Blister Pack 5 pcs
4	577864201	KLAMMER	1	Staple Blister Pack 100 pcs
5	577864301	KABEL	1	Wire, Blister Pack 150 m
5	577864302	KABEL	1	Wire, Blister Pack 50 m
6	580662001	KABEL	1	Wire 250 m
7	593297702	KABEL	1	Wire 300 m Pro 5,5 mm
8	522914102	KABEL	1	Wire 500 m 3,4 mm

9	580662004	KABEL	1	Wire 800 m
10	593163601	POWER SUPPLY UNIT	1	Power Unit EU, Plug in
10	590442202	DRIVENHED	1	Power Unit GB
10	590442203	POWER SUPPLY UNIT	1	Power Unit CH
10	590442204	DRIVENHED	1	Power Unit US
10	590442205	DRIVENHED	1	Power Unit AUS/NZ
10	590442206	DRIVENHED	1	Power Unit JP
10	590442207	DRIVENHED	1	Power Unit ROK
10	590442208	DRIVENHED	1	Power Unit BR
10	590442209	DRIVENHED	1	Power Unit ARG
10	584862601	DRIVENHED	1	Power Unit EU, Desktop
12	595084401	BLADE SET	1	Endurance Blade, 6 pcs
12	595084402	BLADE SET	1	Endurance Blade, 45 pcs
12	595084403	BLADE SET	1	Endurance Blade, 300 pcs
15	579825101	KABLAGE KPL	1	Low Voltage Cable, 20 m
16	579825102	KABLAGE KPL	1	Low Voltage Cable, 10 m
17	579825103	KABLAGE KPL	1	Low Voltage Cable, 3 m
17	579825104	KABLAGE KPL	1	Low Voltage Cable, 5 m

18	597435801	SCREW	1	6 pcs+Key
19	586277901	MÆRKAT	1	Cable Markers, 10 pcs
20	594054801	MÆRKAT	1	Label Alarm
21	590855001	OPBEVARINGSKASSE	1	Cable Connector Protection
22	596339801	VÆRKTØJ	1	Bit for Robotic Blades
23	577606604	BLADE SET	1	Long Life Safety Blade, 300 pcs
23	577864603	BLADE SET	1	Long Life Safety Blade, Blister Pack 9 pcs
23	577606505	BLADE SET	1	Long Life Safety Blade, 45 pcs

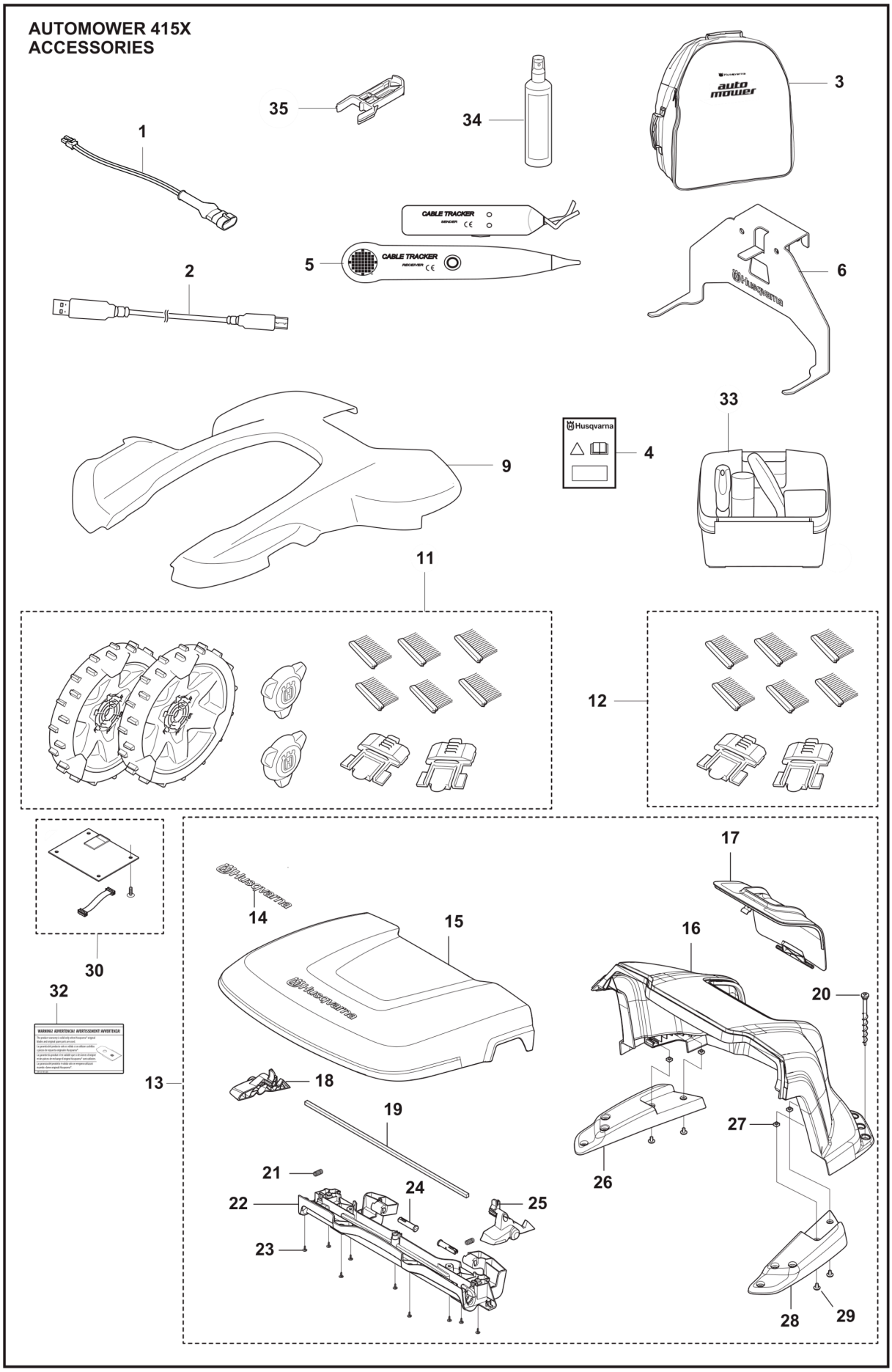
AUTOMOWER 415X
ACCESSORIES
1
2
3
4
5
6
9
11
12
13
14
15
16
17
18
19
20
21
22
23
24
25
26
27
28
29
30
32
33
34
35
CABLE TRACKER
CABLE TRACKER
Husqvarna
automower

Reference	Artikelnummer	Varenavn	Antal	Kommentar
1	598013102	LEDNING KPL	1	Battery tester cable
2	577518102	KABEL	1	Service Cable (USB)
4	580689502	MÆRKAT	1	Warranty Seal 1pcs
5	577606801	TESTUDSTYR	1	Interruption Detector
6	597703601	WALL HANGER	1	Wallhanger AM305
9	529461301	BODY KIT	1	White
9	529461302	BODY KIT	1	Orange
9	529461303	BODY KIT	1	Grey
11	597705401	WHEEL KIT	1	Terrain KIT (Brush KIT + Rear wheels)
12	505132803	BØRSTESÆT	1	Brush, 6 pcs
12	597704601	BØRSTESÆT	1	Wheel Brush KIT (Holder x2, Brush x6)
13	587236101	HUS	1	House KIT
14	577469001	MÆRKAT	1	Decal
15	585323501	DÆKSEL	1	Lid
16	586993801	DÆKSEL	1	Cover Base
17	585323602	LEM	1	Hatch

18	585324002	HÅNDTAG	1	Handle Left
19	585324101	LED	1	Steel
20	597435801	SCREW	1	6 pcs+Key
21	580511401	FJEDER	2	Spring
22	585341601	BJÆLKE	1	Beam
23	575543314	SCREW	9	Screw
24	585341501	AXEL	2	Hinge Pin
25	585324001	HÅNDTAG	1	Handle Right
26	585323802	STØTTE	1	Support Left
27	503226601	MØTRIK 4-KANTET	4	Square Nut
28	585323801	STØTTE	1	Support Right
29	535129303	SKRUE IHPANM	4	Screw
30	586662315	GPS MODULE	1	AM Connect Kit
32	591374101	MÆRKAT	1	Warning Original Blade SE,NO,DK,FIN
32	591374102	MÆRKAT	1	Warning Original Blade DE,FR,NL,IT
32	591374103	MÆRKAT	1	Warning Original Blade UK,ES,FR,IT
33	590855101	MAINTENANCE KIT	1	Maintenance and Cleaning
34	593967901	SPRAY	1	Care and Shine 200ml

35	598764201	GAFFEL	1