2026-11-02

Husqvarna Automower® 410VE NERA



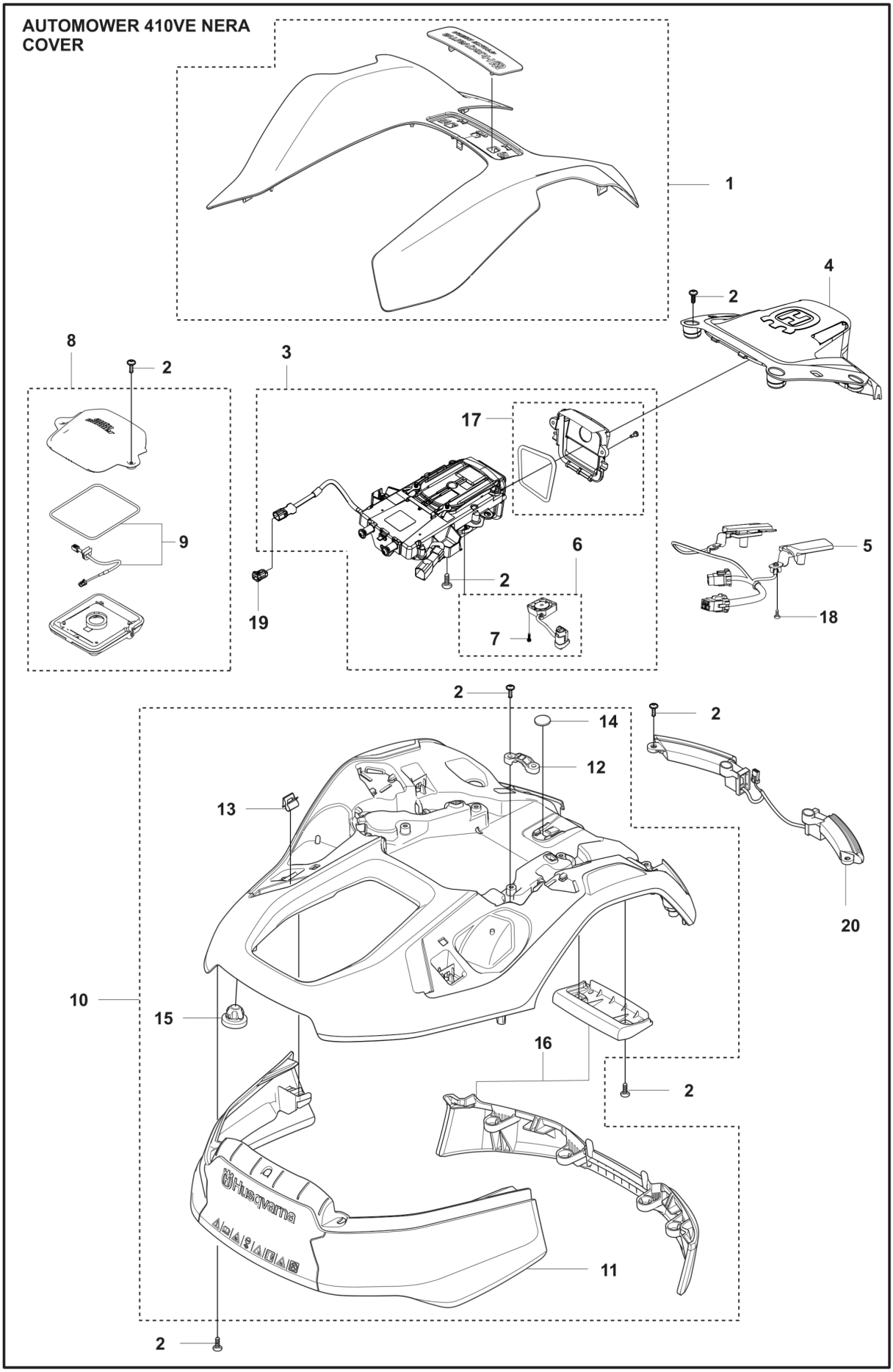
AUTOMOWER 410VE NERA
COVER
1
2
4
8
2
3
17
9
6
2
5
19
7
18
2
14
2
12
13
20
10
15
16
2
11
2

Reference	Artikelnummer	Varenavn	Antal	Kommentar
1	540196801	COVER ASSY	1	Top cover kit
2	574450101	SKRUE ITXPANT	26	Screw
3	548163701	VISION MODULE	1	Vision module
4	548738701	HUS	1	
5	547498301	LEDNING KPL	1	Charging plate with cable
6	541225601	MOTOR KIT	1	Fan motor kit
7	540450001	SCREW	3	Screw
8	970862201	EPOS MODULE	1	EU
8	970862207	EPOS MODULE	1	AU
8	970862206	EPOS MODULE	1	NZ
8	970862208	EPOS MODULE	1	JP
9	547340401	LEDNING KPL	1	Kit, wiring assy + seal
10	546525302	BODY KIT	1	
11	536997401	KOFANGER	1	Rear bumper
12	593355202	OVERFALD	1	
13	593778401	KLEMME	6	

14	593822101	MAGNET	1	
15	546632301	KOBLING	4	Snaploc
16	548084201	KOFANGER	1	Kit: Fear bumper and Handle
17	540197101	DÆKSELSÆT	1	Cover front kit
18	575529502	SKRUE ITXPANTT	2	Screw
19	536464501	TÆTNINGSPROP	1	
20	537555901	LEDNING KPL	1	LED lights

AUTOMOWER 410VE NERA
CONSOLE

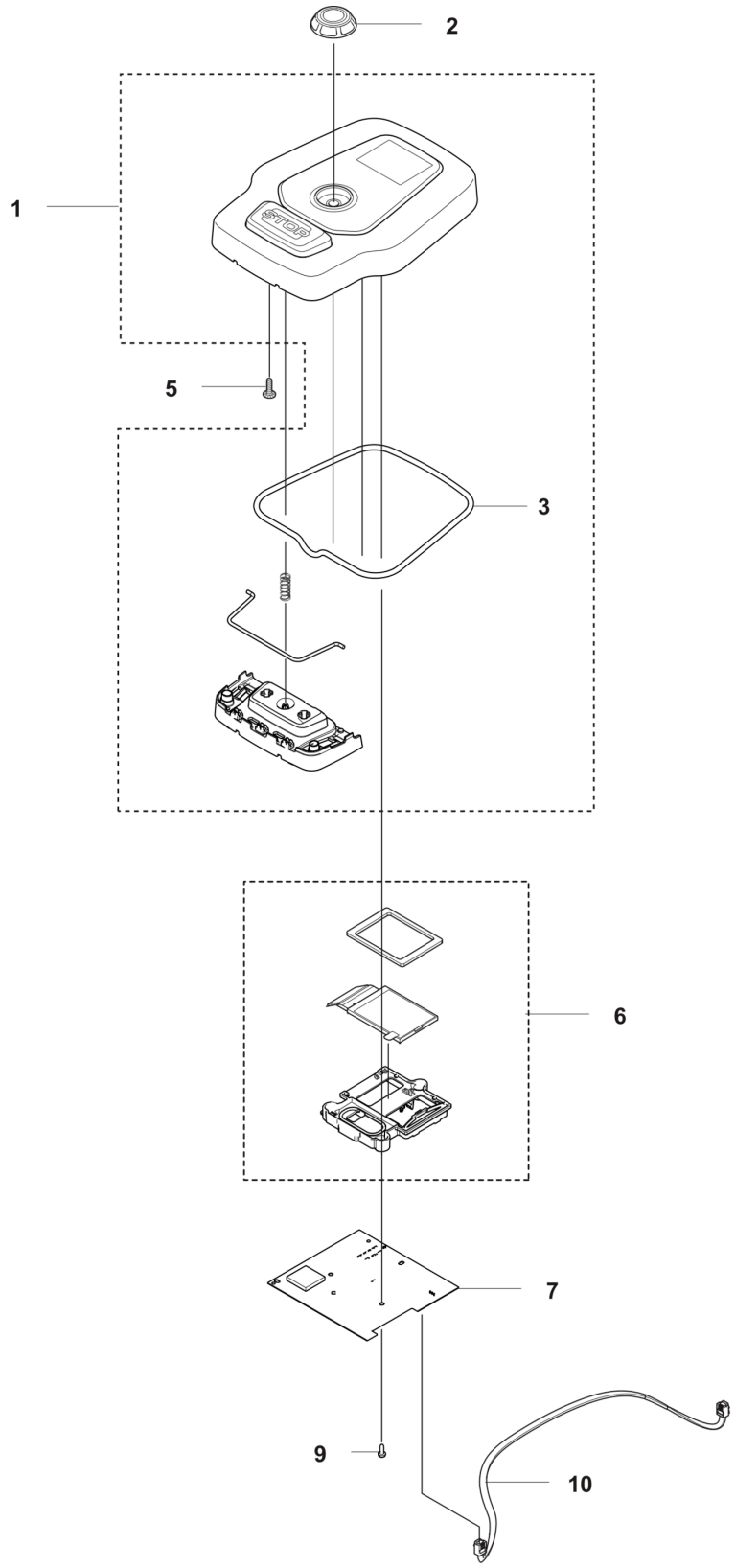

Reference	Artikelnummer	Varenavn	Antal	Kommentar
1	548084702	DÆKSELSÆT	1	
2	531375901	KNOP	1	Jog Wheel
3	599911803	TÆTNING	1	Sealing strip
5	574450101	SKRUE ITXPANT	4	Screw
6	538822401	DISPLAY KIT	1	
7	599702701	KREDSKORT	1	Application circuit board
9	525887402	SCREW CITXPANT	3	
10	536253905	LEDNING KPL	1	Wiring Assy Magnetic sensor

AUTOMOWER 410VE NERA
CHASSIS UPPER

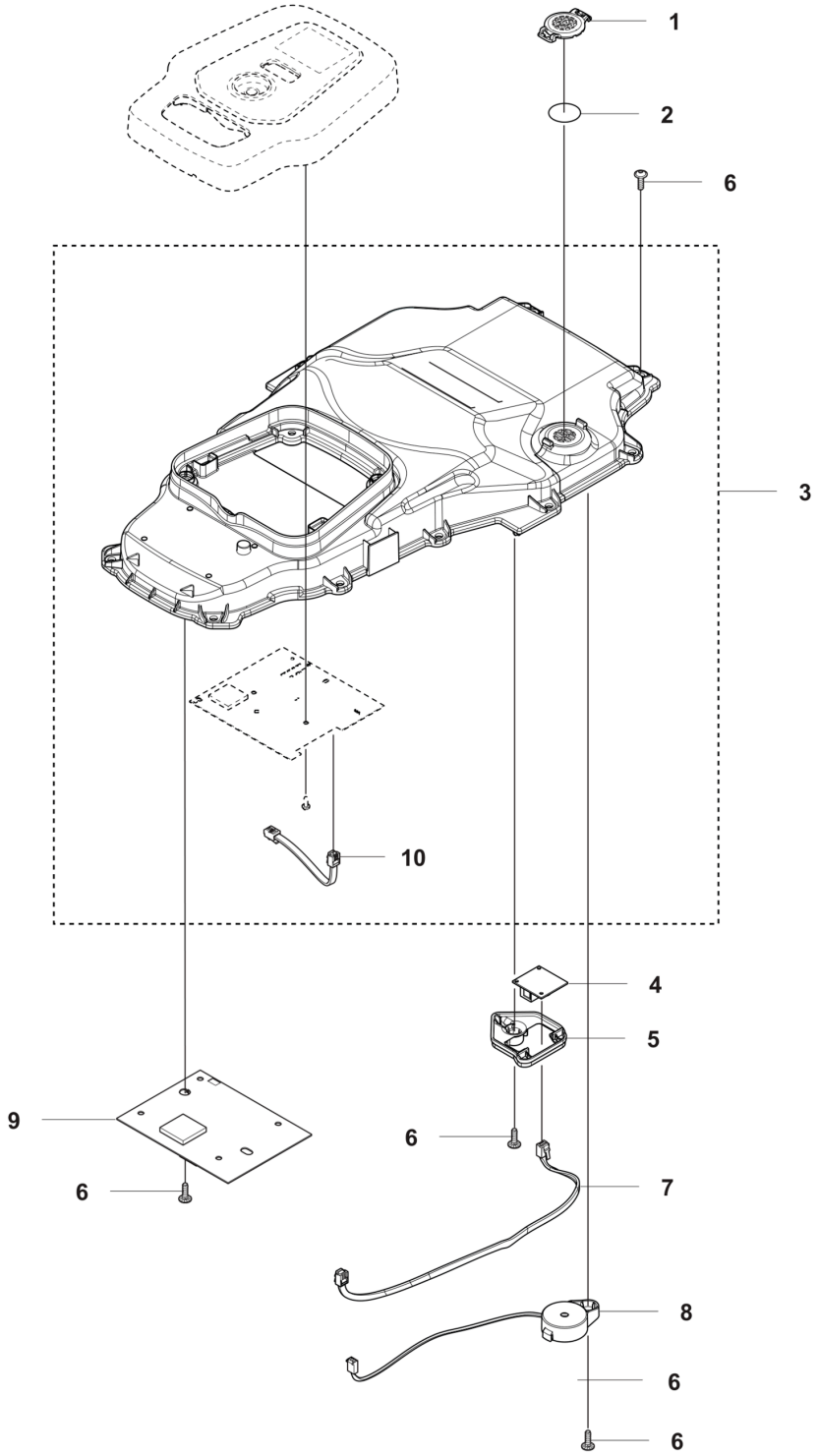

Reference	Artikelnummer	Varenavn	Antal	Kommentar
1	586038902	DÆKSEL	1	Cover air filter
2	577753701	LUFTFILTER	1	Air filter
3	548084601	CHASSIS	1	Chassis upper KIT
4	591125501	KREDSKORT	1	Magnetic sensor circuit board
5	535563901	HOLDER	1	Holder magnetic sensor curcuit board
6	574450101	SKRUE ITXPANT	14	
7	536253911	LEDNING KPL	1	Wiring Assy Magnetic sensor
8	531351802	LEDNING KPL	1	Buzzer
9	536462903	KREDSKORT	1	Communication circuit board, CBT10
10	547108613	LEDNING KPL	1	

AUTOMOWER 410VE NERA
CHASSIS LOWER

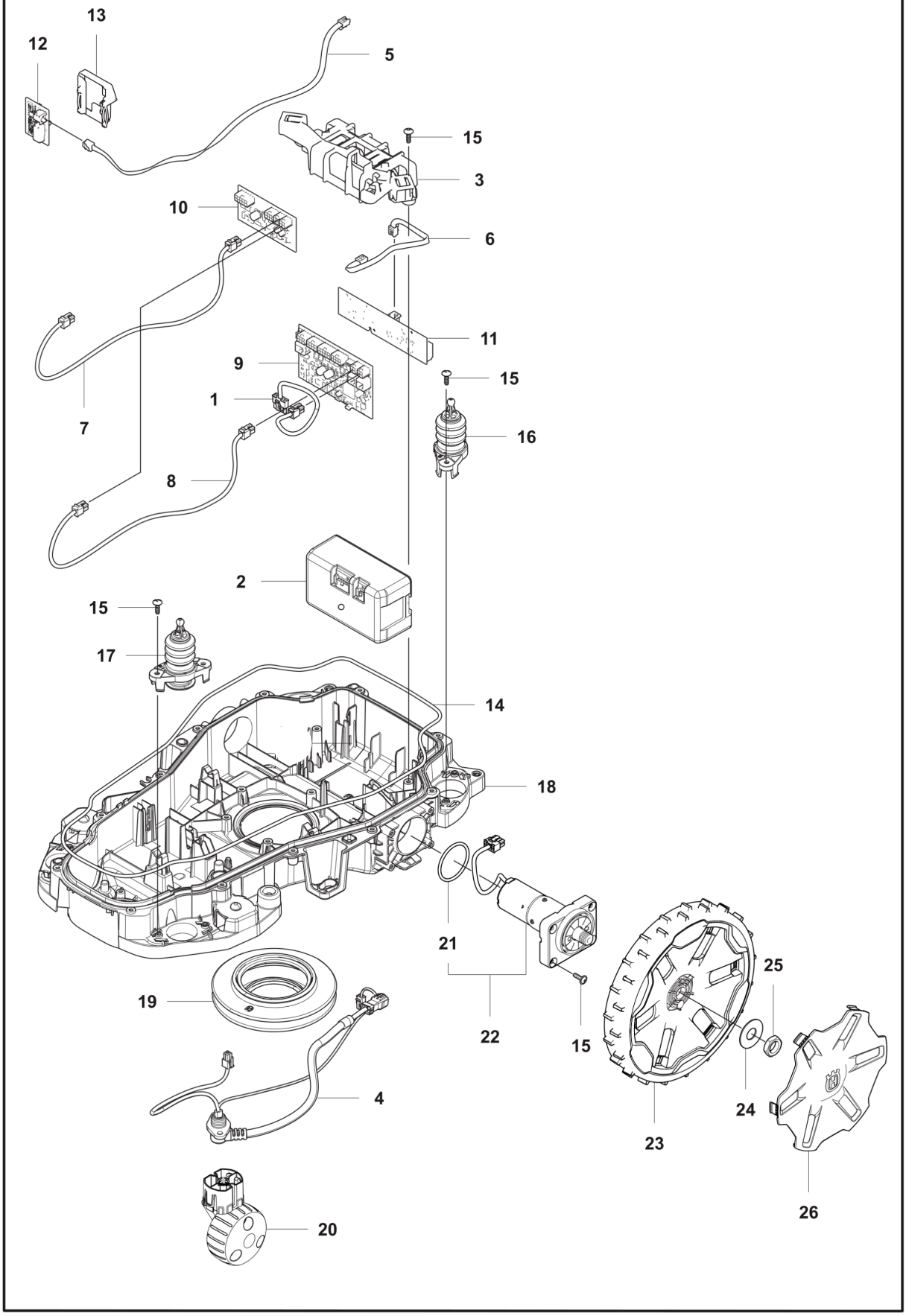

Reference	Artikelnummer	Varenavn	Antal	Kommentar
1	535280508	LEDNING KPL	1	Wiring assy battery
2	536898201	BATTERY	1	
3	536971001	FÆSTE	1	
4	546333602	LEDNING KPL	1	Main Cable
5	536253905	LEDNING KPL	1	Wiring assy loop sensor rear
6	536253908	LEDNING KPL	1	Wiring assy loop sensor front
7	547846804	LEDNING KPL	1	Wiring assy application board
8	547846804	LEDNING KPL	1	Wiring assy motor control
9	591125602	KREDSKORT	1	Motor contol circuit board front
10	536657701	KREDSKORT	1	Motor contol circuit board rear
11	546001101	KREDSKORT	1	Loop sensor circuit board front
12	536657101	KREDSKORT	1	Loop sensor circuit board rear
13	538641201	RAMME	1	Holder loop sensor circuit board
14	574874709	TÆTNINGSLISTE	1	
15	574450101	SKRUE ITXPANT	20	
16	531281201	JOYSTICK ASSY	2	Joysstick lift & collision front

17	531281301	JOYSTICK ASSY	2	Joysstick collision rear
18	548084301	CHASSIS	1	Chassis lower
19	599318301	BÆLG	1	
20	547412801	HJUL KPL	2	Rear wheel
21	580443902	O-RING	2	
22	599683402	WHEEL MOTOR ASSY	2	Wheel motor
23	538816501	HJUL KPL	2	Front wheel
24	586210601	SKIVE	1	
25	731432401	HEXAGON TYND	2	
26	531356502	NAVKAPSEL	2	

AUTOMOWER 410VE NERA
BLADE MOTOR AND CUTTING EQUIPMENT

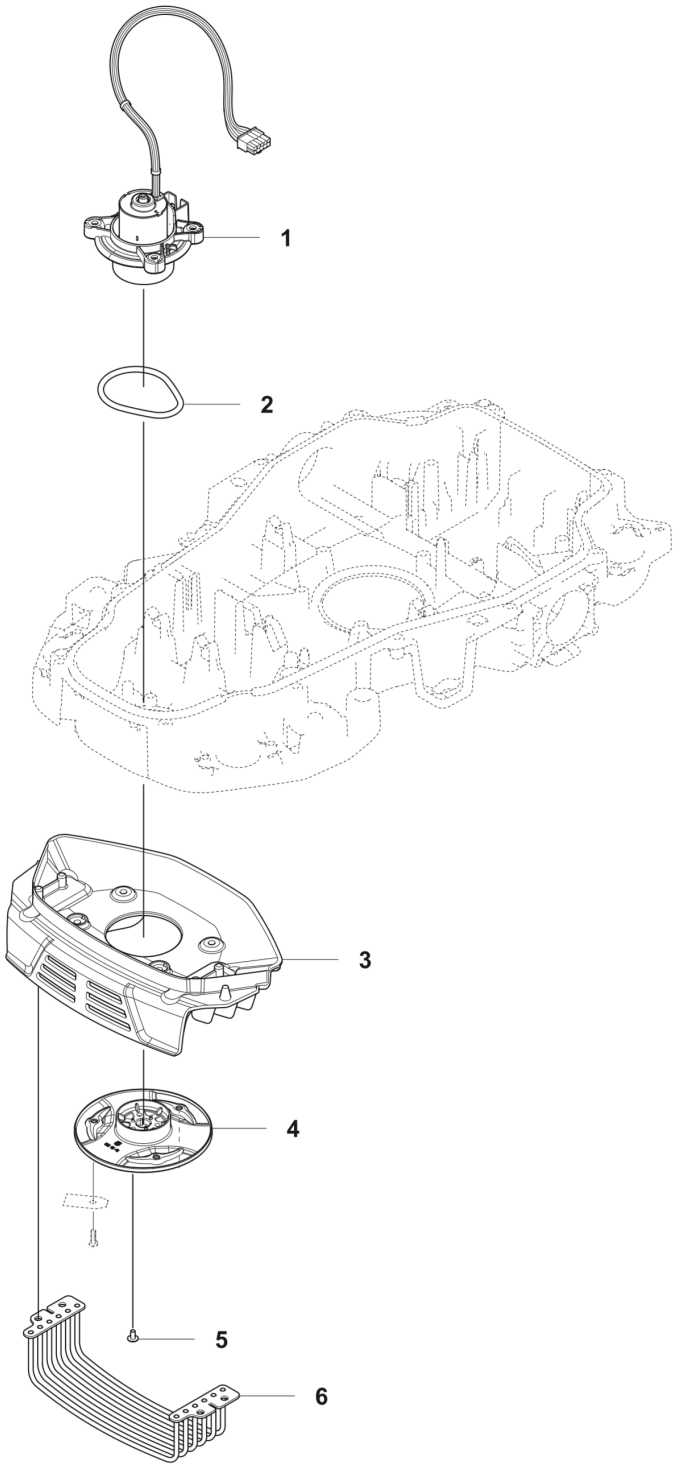

Reference	Artikelnummer	Varenavn	Antal	Kommentar
1	548084401	CUTTER MOTOR ASSY	1	Cutting motor rear
2	529516301	PAKNING	1	
3	547596301	SKÆRM	1	Blade disc guard
4	536984301	SKÆRESKIVE	1	
5	590508701	SCREW	3	
6	547596401	DÆKSEL	1	Blade disc guard

AUTOMOWER 410VE NERA
BLADE MOTOR & CUTTING EQUIPMENT

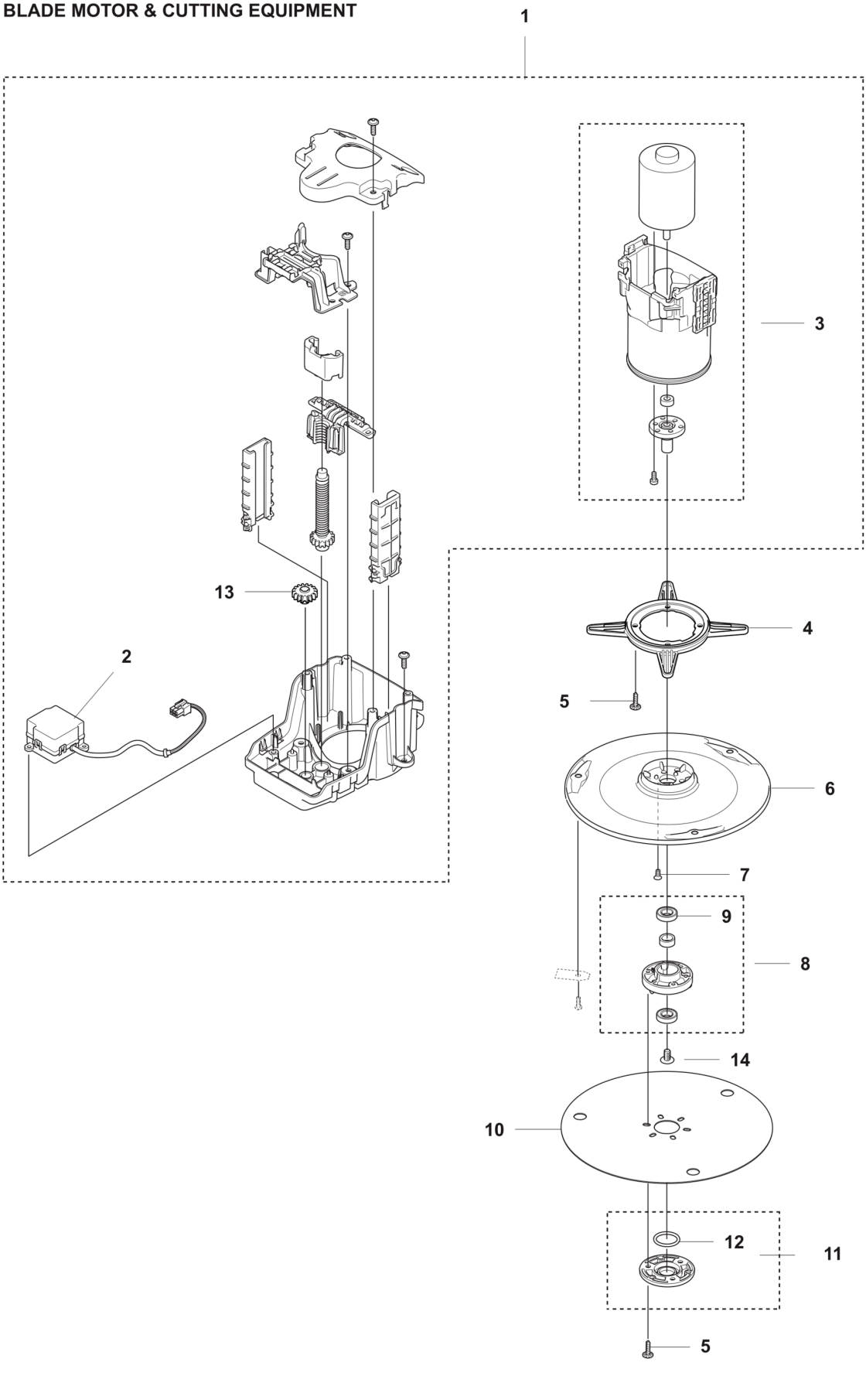

Reference	Artikelnummer	Varenavn	Antal	Kommentar
1	546838902	CUTTING MODULE	1	Cutting module
2	592735803	HEIGHT ADJUSTMENT MOTOR	1	Cutting height adjustment motor
3	599428302	CUTTER MOTOR ASSY	1	Cutting motor front
4	599318201	RAMME	1	
5	575543314	SCREW	3	
6	531177401	SKÆRESKIVE	1	Blade disc
7	590508701	SCREW	3	
8	588421702	LEJEHUS KPL.	1	
9	535075703	KUGLELEJE	2	
9	593080801	KUGLELEJE	2	Tube 50 pcs
10	598794801	FRIKTIONSPLADE	1	
11	587449601	DÆKSELSÆT	1	Bearing cover
12	585297501	O-RING	1	
13	599317601	TANDHJUL	1	
14	535076001	SCREW	1	

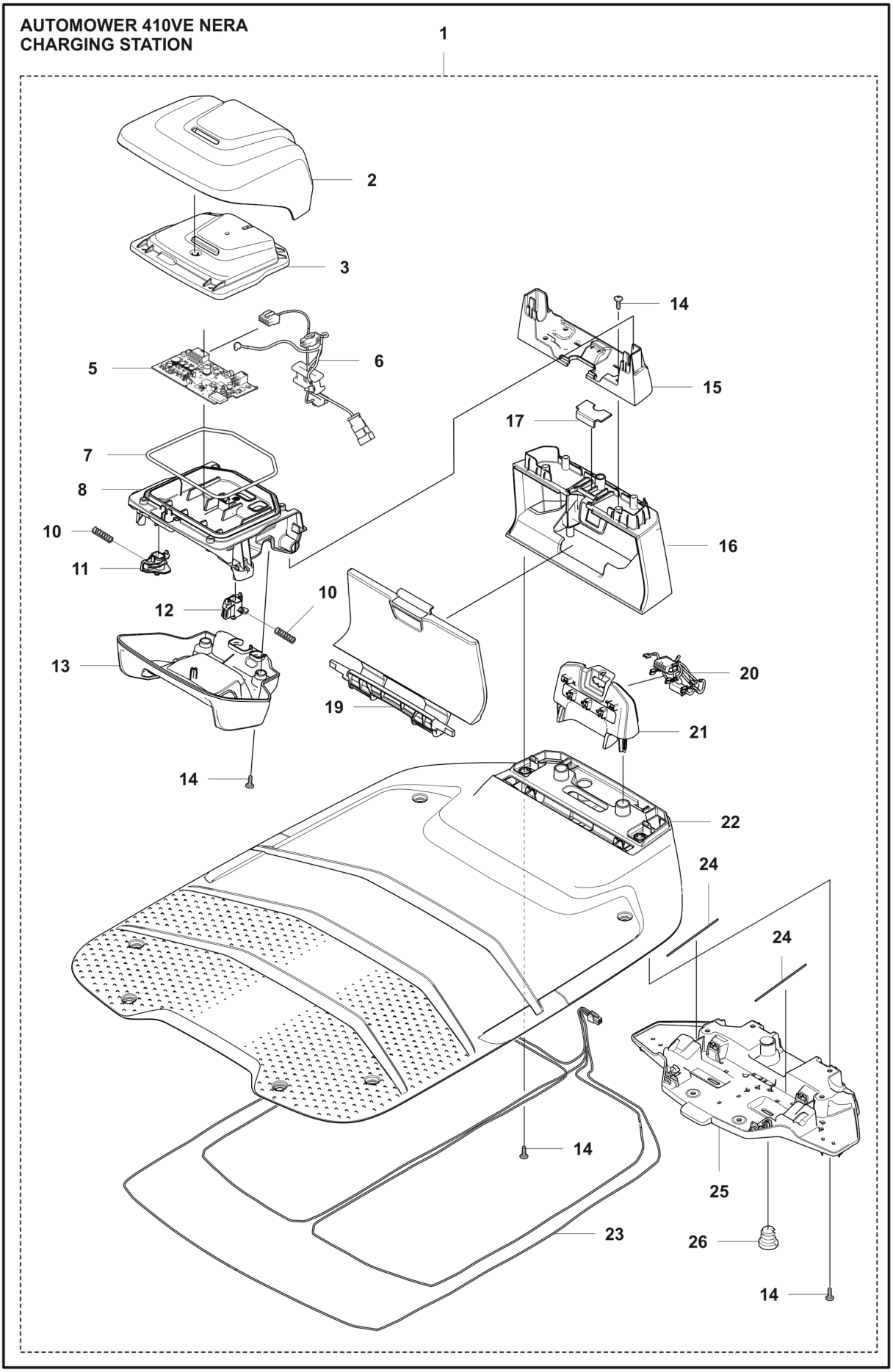
AUTOMOWER 410VE NERA
CHARGING STATION
1
2
3
5
6
14
15
17
7
8
16
10
11
12
10
13
19
20
21
14
22
24
24
14
25
23
26
14

Reference	Artikelnummer	Varenavn	Antal	Kommentar
1	531422302	LADESTATION	1	
2	531422502	HAT	1	Upper Cover
3	531422902	DÆKSEL	1	
5	529899501	KREDSKORT	1	Charging station circuit board
6	536055201	LEDNING KPL	1	Wiring Assy CS Main
7	574874708	TÆTNINGSLISTE	1	
8	531423002	RAMME	1	
10	535130101	FJEDER	2	
11	531422601	KLAP	1	Contact Plate Left
12	531422602	KLAP	1	Contact Plate Right
13	531422701	HYLSTER	1	Lower Cover
14	574450101	SKRUE ITXPANT	12	
15	535558603	STØTTE	1	
16	531422401	HUS	1	
17	536177201	DÆKSEL	1	
19	531422802	LEM	1	

20	535600701	LEDNING KPL	1	Wiring Assy Antenna bridge
21	535600601	HUS	1	Cable Holder
22	531423103	BASEPLATE	1	Charging Station Baseplate
23	536166001	LEDNING KPL	1	Wiring Assy Baseplate
24	588470201	FJEDER	2	
25	535600501	ANKERPLADE	1	Baseplate Support
26	531262701	PROP	1	

AUTOMOWER 410VE NERA
INSTALLATION ACCESSORIES

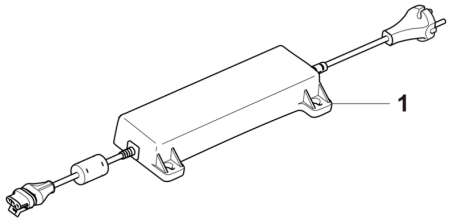



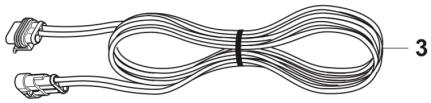

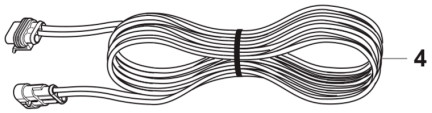

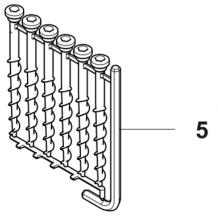

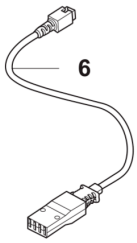

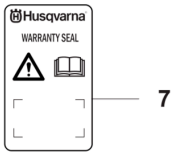



Reference	Artikelnummer	Varenavn	Antal	Kommentar
1	599628501	DRIVENHED	1	EU
1	599628502	DRIVENHED	1	GB,IE
1	599662503	DRIVENHED	1	CH
1	599628504	DRIVENHED	1	US/CA
1	599662505	DRIVENHED	1	AUS/NZ
2	579825103	KABLAGE KPL	1	Low Voltage Cable 3 m
3	579825104	KABLAGE KPL	1	Low Voltage Cable 5 m
4	579825102	KABLAGE KPL	1	Low Voltage Cable 10 m
4	579825101	KABLAGE KPL	1	Low Voltage Cable 20 m
5	597435801	SCREW	1	Anchor screws, 6pcs
6	598013102	LEDNING KPL	1	
7	580689502	MÆRKAT	1	Warranty seal
8	546137702	MÆRKAT	1	Warranty seal