2026-11-02

Husqvarna Automower® 315



AUTOMOWER 310, 315
COVER

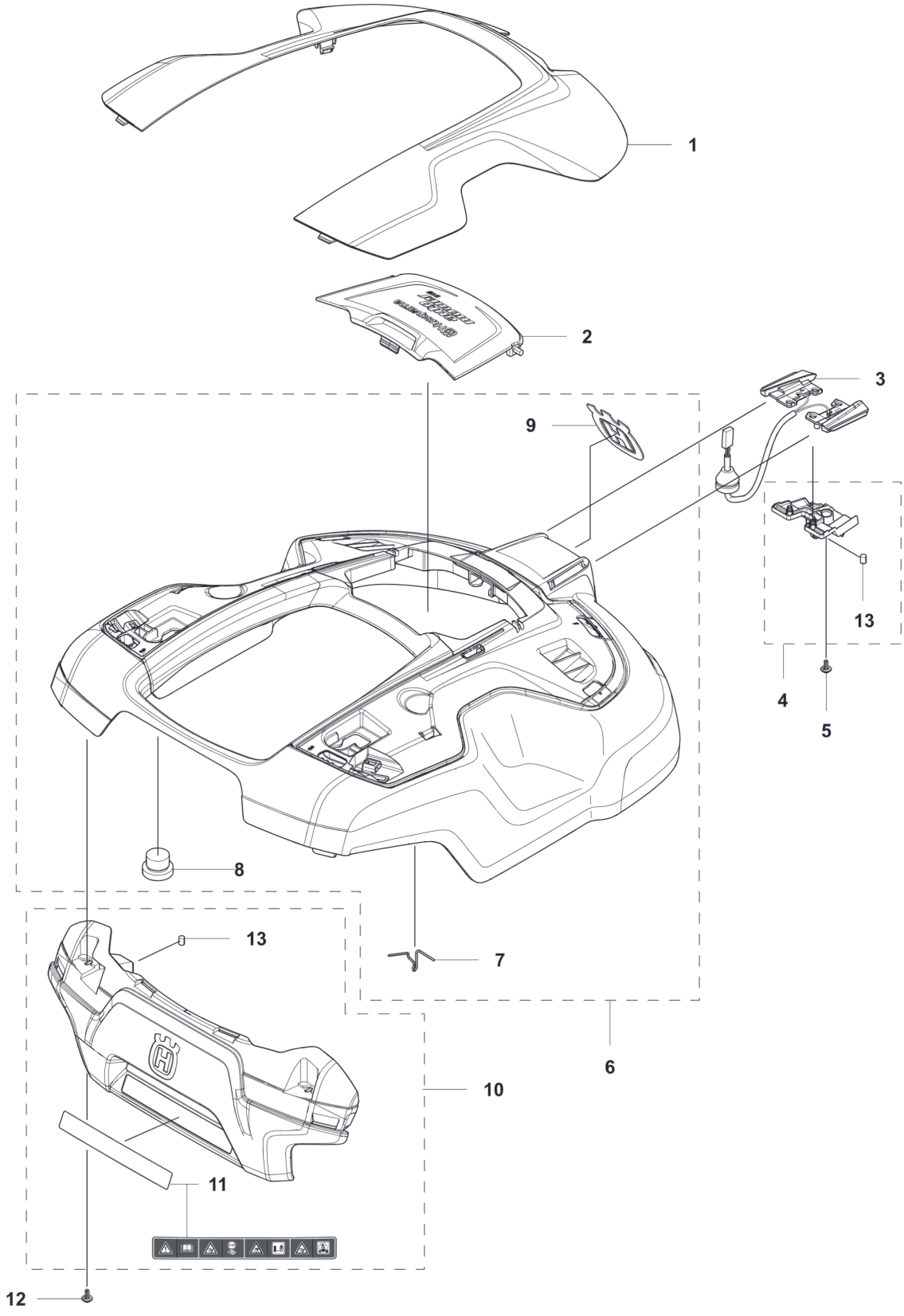

Reference	Artikelnummer	Varenavn	Antal	Kommentar
1	585537701	DÆKSEL	1	Top cover Grey
2	585538102	KAPPE	1	Hood 315
3	531144701	KABLAGE KPL	1	Charging Plate Wiring
4	587448602	HOLDER KIT	1	Holder KIT
5	574450101	SKRUE ITXPANT	1	Screw
6	587448501	BODY KIT	1	Body ASSY
7	587419402	FJEDER	1	Spring Hood
8	580526801	HAT	3	Cap Snaploc
9	574382101	MÆRKAT	1	Crown
10	587448701	KOFANGER	1	Bumper ASSY
11	586359701	MÆRKAT	1	Label Warning
12	574450101	SKRUE ITXPANT	2	Screw
13	598456401	MAGNET	2	Ø5

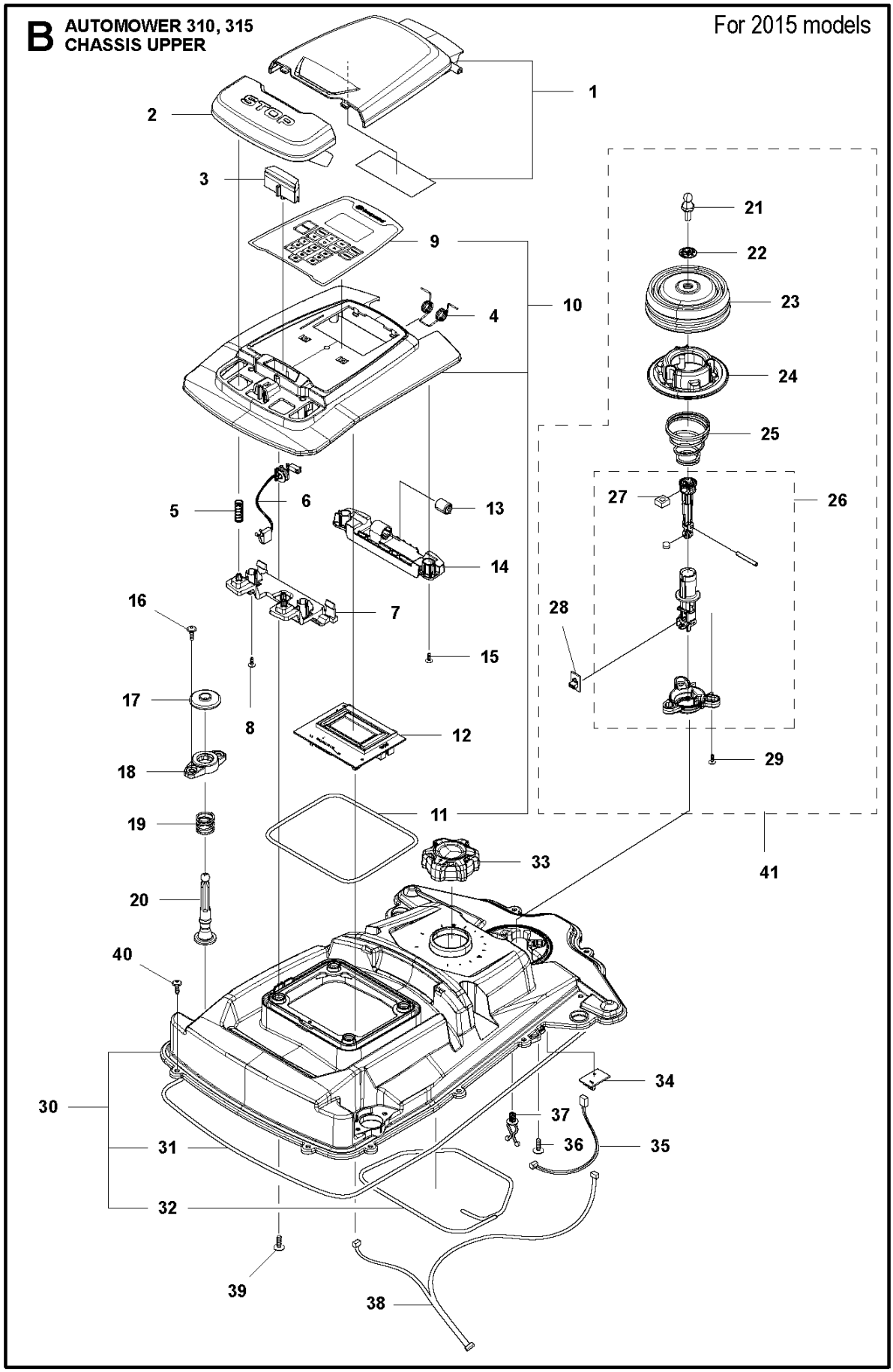
B
AUTOMOWER 310, 315
CHASSIS UPPER
For 2015 models
STOP
1
2
3
4
5
6
7
8
9
10
11
12
13
14
15
16
17
18
19
20
21
22
23
24
25
26
27
28
29
30
31
32
33
34
35
36
37
38
39
40
41

Reference	Artikelnummer	Varenavn	Antal	Kommentar
1	587651301	HATCH KIT	1	
2	585275601	KNAP	1	
3	585275901	LÅS	1	
4	585255401	DREJEFJEDER	1	
5	576242201	FJEDER	3	
6	574480302	AFBRYDER	1	
7	585275701	STØTTE	1	
8	575543314	SCREW	2	
9	584974601	TASTATUR	1	315
10	587449002	DÆKSELSÆT	1	315
11	574874708	TÆTNINGSLISTE	1	
12	584390901	KREDSKORT	1	
13	580352302	BØSNING	1	
14	585275401	STØTTE	1	
15	575543314	SCREW	2	
16	574450101	SKRUE ITXPANT	4	

17	585298201	PAKNING	2
18	585298301	TOOL HOLDER	2
19	585298101	FJEDER	2
21	580526701	BOLT	1
22	579525701	SKIVE	1
23	579474601	BÆLG	1
24	579484801	HOLDER	1
25	580672501	FJEDER	1
26	587448802	JOYSTICK KIT	1
27	503226601	MØTRIK 4-KANTET	1
28	592852301	KREDSKORT	1
29	575543314	SCREW	3
30	587448901	CHASSIS KIT	1
31	574874709	TÆTNINGSLISTE	1
32	574874708	TÆTNINGSLISTE	1
33	585281401	KNOP	1
34	592909501	KREDSKORT	1
35	585208501	KABELRØR	1

36	574450101	SKRUE ITXPANT	3
37	580682901	TOOL HOLDER	3
38	585208601	KABELRØR	1
39	574450101	SKRUE ITXPANT	4
40	574450101	SKRUE ITXPANT	12
41	581620903	JOYSTICK KIT	1

B AUTOMOWER 310, 315
CHASSIS UPPER
For 2020, 2019, 2018., 2017 & 2016 models

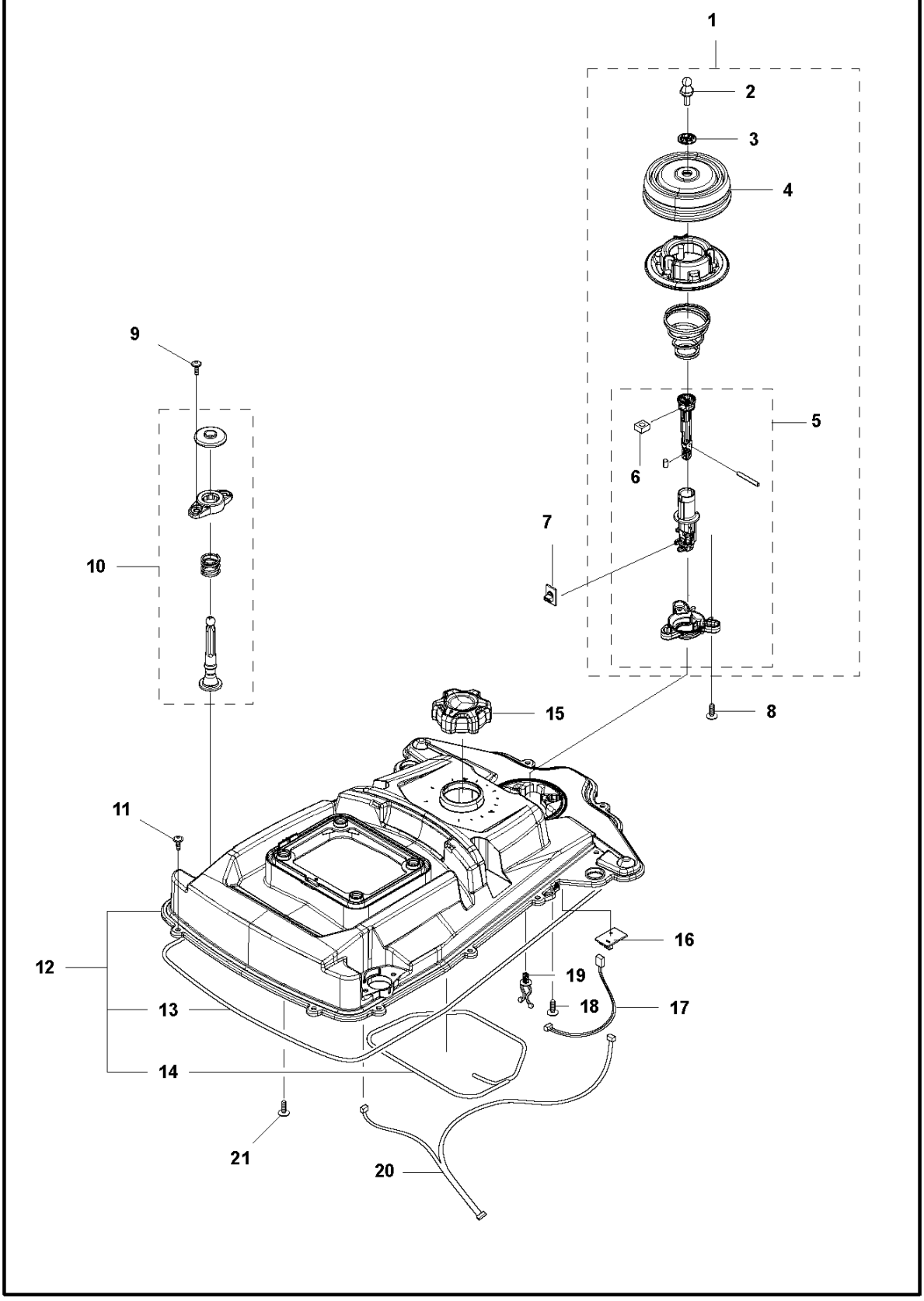

Reference	Artikelnummer	Varenavn	Antal	Kommentar
1	581620903	JOYSTICK KIT	1	Joystick KIT Front
2	580526701	BOLT	1	Stud
3	579525701	SKIVE	1	Washer
4	579474601	BÆLG	1	Bellows
5	587448802	JOYSTICK KIT	1	Joystick ASSY
6	503226601	MØTRIK 4-KANTET	1	Square Nut
7	592852301	KREDSKORT	1	PCBA Lift Sensor
8	575543314	SCREW	3	Screw
9	574450101	SKRUE ITXPANT	4	Screw
10	594058601	JOYSTICK ASSY	2	Joystick KIT Rear
11	574450101	SKRUE ITXPANT	12	Screw
12	587448902	CHASSIS KIT	1	Chassis KIT
13	574874709	TÆTNINGSLISTE	1	
14	574874708	TÆTNINGSLISTE	1	
15	585281401	KNOP	1	Knob
16	592909501	KREDSKORT	1	PCBA Collision Sensor

17	585208501	KABELRØR	1	Loom Lift-Collision
18	574450101	SKRUE ITXPANT	3	Screw
19	580682901	TOOL HOLDER	3	Holder Twist Lock
20	588797801	LEDNING KPL	1	Loom
21	574450101	SKRUE ITXPANT	4	Screw

C AUTOMOWER 310, 315
CENTER CONSOL

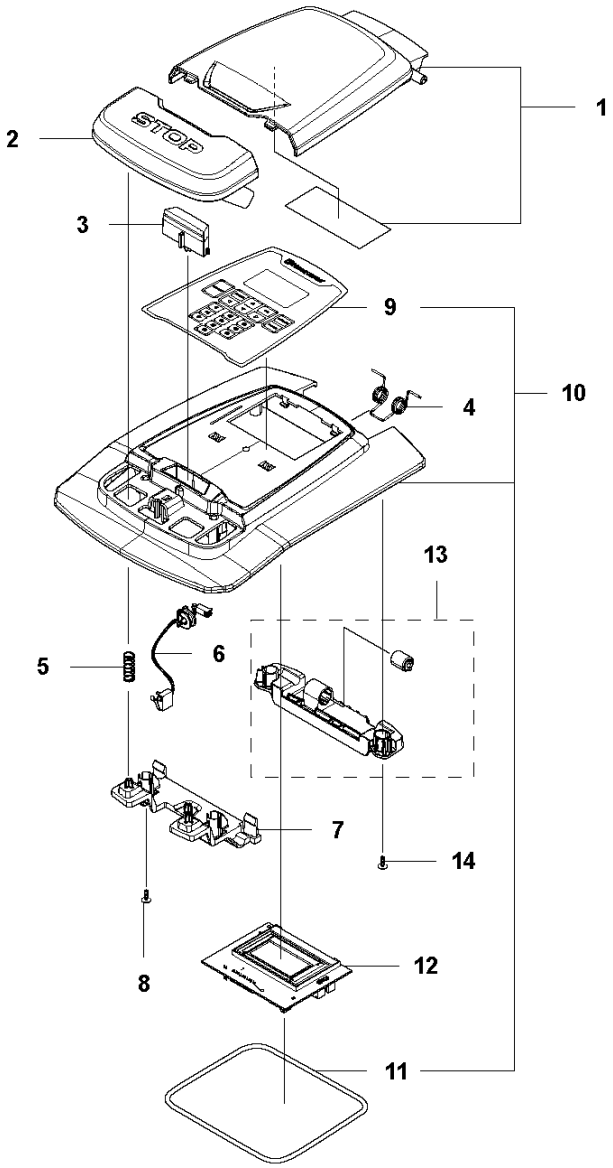

Reference	Artikelnummer	Varenavn	Antal	Kommentar
1	587651301	HATCH KIT	1	Hatch KIT
2	585275601	KNAP	1	Stop Button
3	585275901	LÅS	1	Lock
4	585255401	DREJEFJEDER	1	Torsion Spring
5	576242201	FJEDER	3	Spring
6	574480302	AFBRYDER	1	Switch
7	585275701	STØTTE	1	Support Rear
8	575543314	SCREW	2	Screw
9	584974601	TASTATUR	1	Keyboard 2.8" Display 315
10	587449002	DÆKSELSÆT	1	Cover KIT 2.8" Display 315
11	574874708	TÆTNINGSLISTE	1	Sealing Strip (1 pcs, ¯5 mm)
12	592910201	KREDSKORT	1	PCBA MMI 2.8" Display 315
13	501106101	SUPPORT KIT	1	Support KIT
14	575543314	SCREW	2	Screw

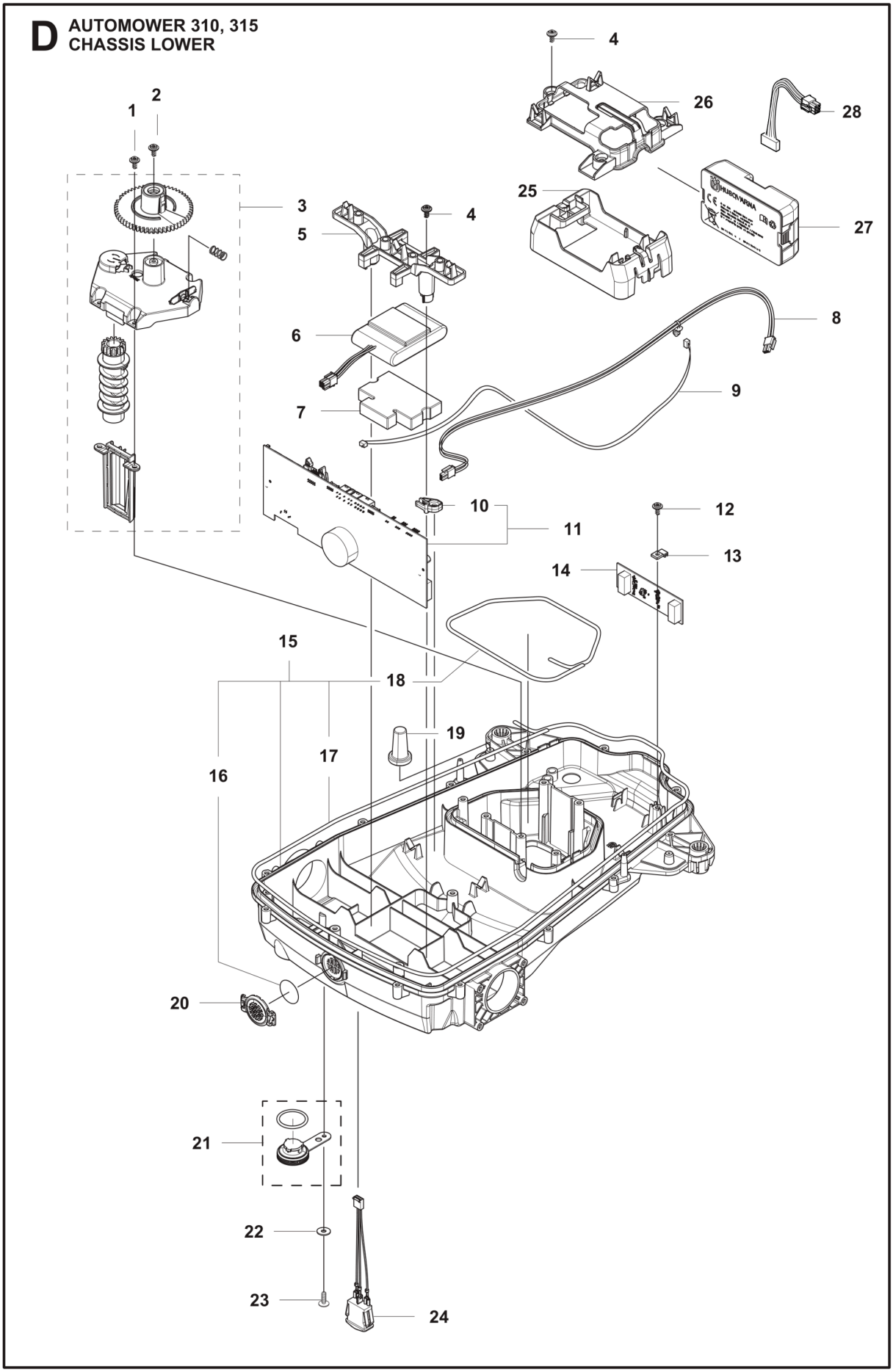
D
AUTOMOWER 310, 315
CHASSIS LOWER
1
2
3
4
5
6
7
8
9
10
11
12
13
14
15
16
17
18
19
20
21
22
23
24
25
26
27
28

Reference	Artikelnummer	Varenavn	Antal	Kommentar
1	574450101	SKRUE ITXPANT	1	Screw
2	574450101	SKRUE ITXPANT	4	Screw
3	501106601	DÆKSELSÆT	1	Cover KIT
4	574450101	SKRUE ITXPANT	2	Screw
5	585304701	TOOL HOLDER	1	Up to Serial number 2005XXXXX
6	589586202	BATTERY	1	Up to Serial number 2005XXXXX
7	589366201	VÆGT	1	Up to Serial number 2005XXXXX
7	593253001	VÆGT	1	From Serial number 2006XXXXX-
8	534156603	LEDNING KPL	1	Loom Charging
9	579708201	LEDNING KPL	1	Loom Loop Sensor
10	585538301	KLEMME	2	Clips
11	592851801	KREDSKORT	1	Main Board From 2016 Models
11	592851601	KREDSKORT	1	Main Board For 2015 Models
12	574450101	SKRUE ITXPANT	1	Screw
13	579529401	OVERFALD	1	Clamp
14	592852701	KREDSKORT	1	Sensor Board

15	587449202	CHASSIS KIT	1	Up to Serial number 1839XXXXX
15	587449203	CHASSIS KIT	1	From Serial number 1840XXXXX
16	577753701	LUFTFILTER	1	Air Filter
17	574874709	TÆTNINGSLISTE	1	Sealing Strip (1 pcs, ¯5 mm)
18	574874708	TÆTNINGSLISTE	1	Sealing Strip (1 pcs, ¯5 mm)
19	586342601	SØJLE	2	Pillar
20	586038902	DÆKSEL	1	Air filter cover
21	581621202	PLUG KIT	1	Plug KIT
22	734113741	SKIVE	1	Washer
23	574450101	SKRUE ITXPANT	1	Screw
24	579708701	LEDNING KPL	1	Loom On-Off
25	594009801	HOLDER	1	From Serial number 2006XXXXX-
26	593252901	FÆSTE	1	From Serial number 2006XXXXX-
27	593247201	BATTERI	1	From Serial number 2006XXXXX-
27	593247211	BATTERI	1	From Serial number 2006XXXXX- For Japan only.
28	535018401	LEDNING KPL	1	From Serial number 2006XXXXX-

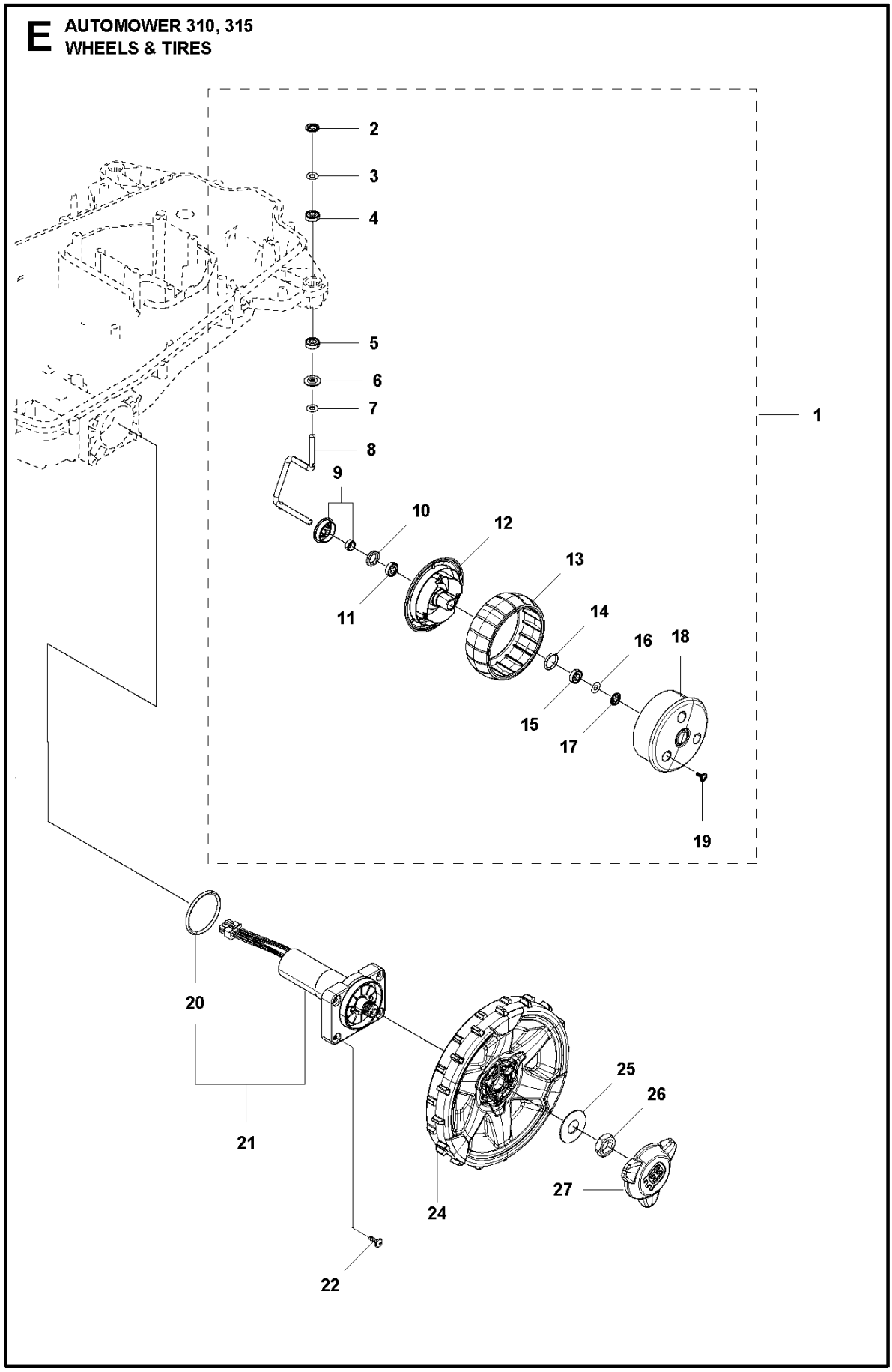
E
AUTOMOWER 310, 315
WHEELS & TIRES
1
2
3
4
5
6
7
8
9
10
11
12
13
14
15
16
17
18
19
20
21
22
24
25
26
27

Reference	Artikelnummer	Varenavn	Antal	Kommentar
1	587651901	WHEEL KIT	2	Front Wheel Assy
2	576019402	LÅSESKIVE	2	Lock Washer
3	585196801	SKIVE	2	Washer
4	585214201	KUGLELEJE	2	Ball Bearing
5	585214201	KUGLELEJE	2	Ball Bearing
6	535087802	WASHER	2	Washer
7	585196801	SKIVE	2	Washer
8	585187201	SPINDEL	2	Spindle
9	587449301	SHIELD KIT	2	Shield KIT
10	580487101	TÆTNING	2	Sealing
11	585214201	KUGLELEJE	2	Ball Bearing
12	579457101	HJUL	2	Wheel Inside
13	574449801	HJUL	2	Wheel Tyre
14	580445101	O-RING	2	O-ring
15	585214201	KUGLELEJE	2	Ball Bearing
16	585196801	SKIVE	2	Washer

17	576019402	LÅSESKIVE	2	Lock Washer
18	579457201	HJUL	2	Wheel Outside
19	575543314	SCREW	6	Screw
20	580443902	O-RING	2	O-ring
21	587449404	MOTOR KIT	2	Up to Serial number 2027XXXXX
21	598587301	MOTOR KIT	2	From Serial number 2028XXXX
22	574450101	SKRUE ITXPANT	8	Screw
24	590217301	HJUL KPL	2	Rear Wheel
25	586210601	SKIVE	2	Washer
26	731432401	HEXAGON TYND	2	Thin Nut
27	579505502	NAVKAPSEL	2	Hub Cap

F **AUTOMOWER 310, 315**
BLADE MOTOR & CUTTING EQUIPMENT
For 2020, 2019, 2018, 2017 & 2016 models

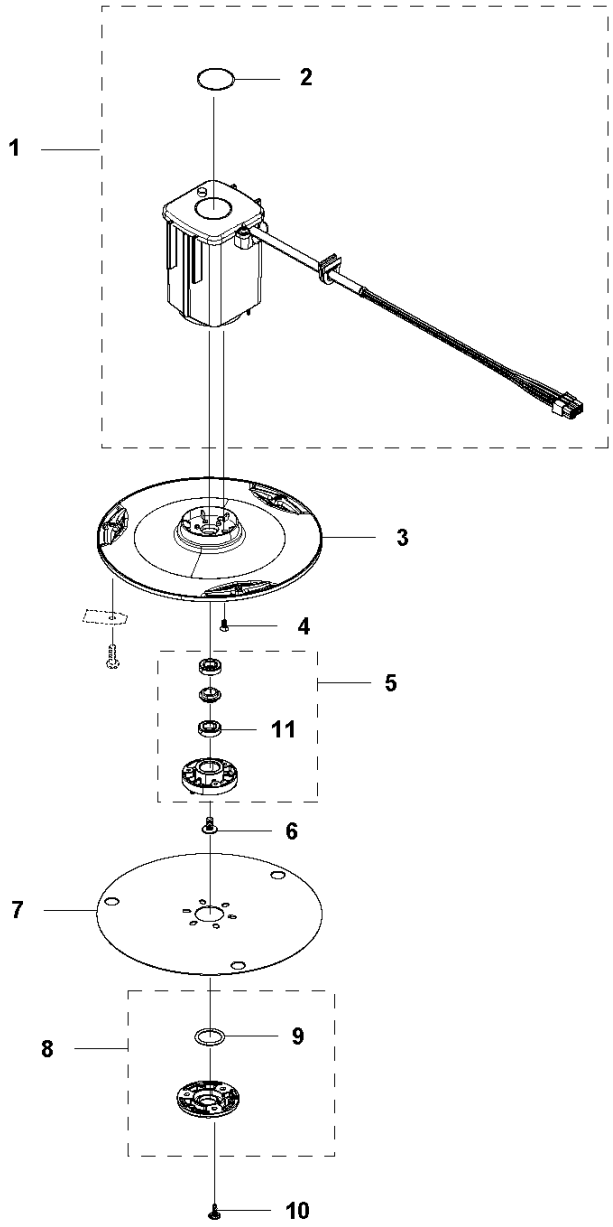

Reference	Artikelnummer	Varenavn	Antal	Kommentar
1	584920505	CUTTER MOTOR ASSY	1	Motor ASSY
2	577753701	LUFTFILTER	10	Air Filter
3	585296901	SKÆRESKIVE	1	Up to Serial number 1837XXXXX
3	585296902	SKÆRESKIVE	1	From Serial number 1838XXXX-2006XXXXX
3	531177401	SKÆRESKIVE	1	From Serial number 200602356-
4	535130502	SCREW	1	Up to Serial number 1837XXXXX
4	590508701	SCREW	3	From Serial number 1838XXXX
5	588421702	LEJEHUS KPL.	1	Bearing Housing ASSY
6	535076001	SCREW	1	Screw
7	585297001	FRIKTIONSPLADE	1	Up to Serial number 2006XXXXX
7	598794801	FRIKTIONSPLADE	1	From Serial number 200602356-
8	587449601	DÆKSELSÆT	1	Bearing Cover
9	585297501	O-RING	1	O-Ring
10	575543314	SCREW	3	Screw
11	535075703	KUGLELEJE	1	
11	593080801	KUGLELEJE	1	Tube 50 pcs

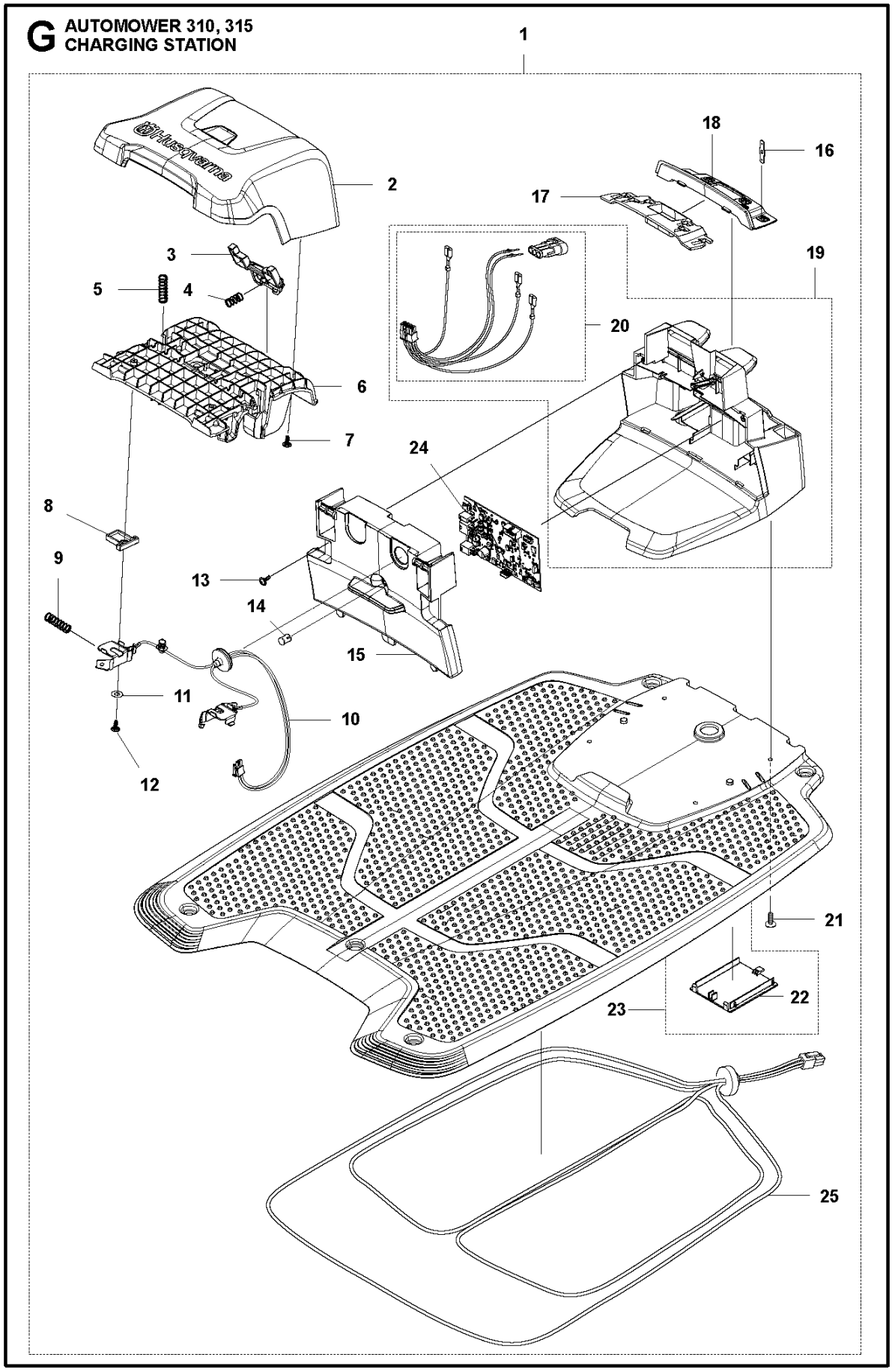
G AUTOMOWER 310, 315
CHARGING STATION
1
2
3
4
5
6
7
8
9
10
11
12
13
14
15
16
17
18
19
20
21
22
23
24
25

Reference	Artikelnummer	Varenavn	Antal	Kommentar
1	585164001	LADESTATION	1	For 2016 & 2015 models
1	585164003	LADESTATION	1	For 2020, 2019, 2018 & 2017 models
2	585071102	HAT	1	Cap
3	579462402	KNAP	1	Button - Release
4	574487001	FJEDER	1	Spring
5	580511401	FJEDER	2	Spring
6	579458004	RAMME	1	Frame
7	575543314	SCREW	4	Screw
8	579460502	AFSTANDSSKIVE	2	Distance
9	580511401	FJEDER	2	Spring
10	531242201	LEDNING KPL	1	Loom Charging Contact
11	734113741	SKIVE	2	Washer
12	575543314	SCREW	2	Screw
13	575543314	SCREW	2	Screw
14	535128702	DIODELINSE	1	For 2017, 2016 & 2015 models
14	590217201	LYGTEGLAS VENSTRE	1	For 2020, 2019 & 2018 models

15	585071401	DÆKSEL	1	Lid
16	580504101	POLSKO	3	Terminal
17	579459901	TOOL HOLDER	1	Holder
18	579459801	PLÅT	1	Panel
19	588416101	HUS KPL	1	Housing
20	587651501	KABEL	1	Loom
21	575543314	SCREW	4	Screw
22	585919301	DÆKSEL	1	Cover
23	587651602	LADEBLIK	1	Charging Plate KIT
24	592909302	KREDSKORT	1	Printed Circuit ASSY
25	590527201	KABLAGE KPL	1	

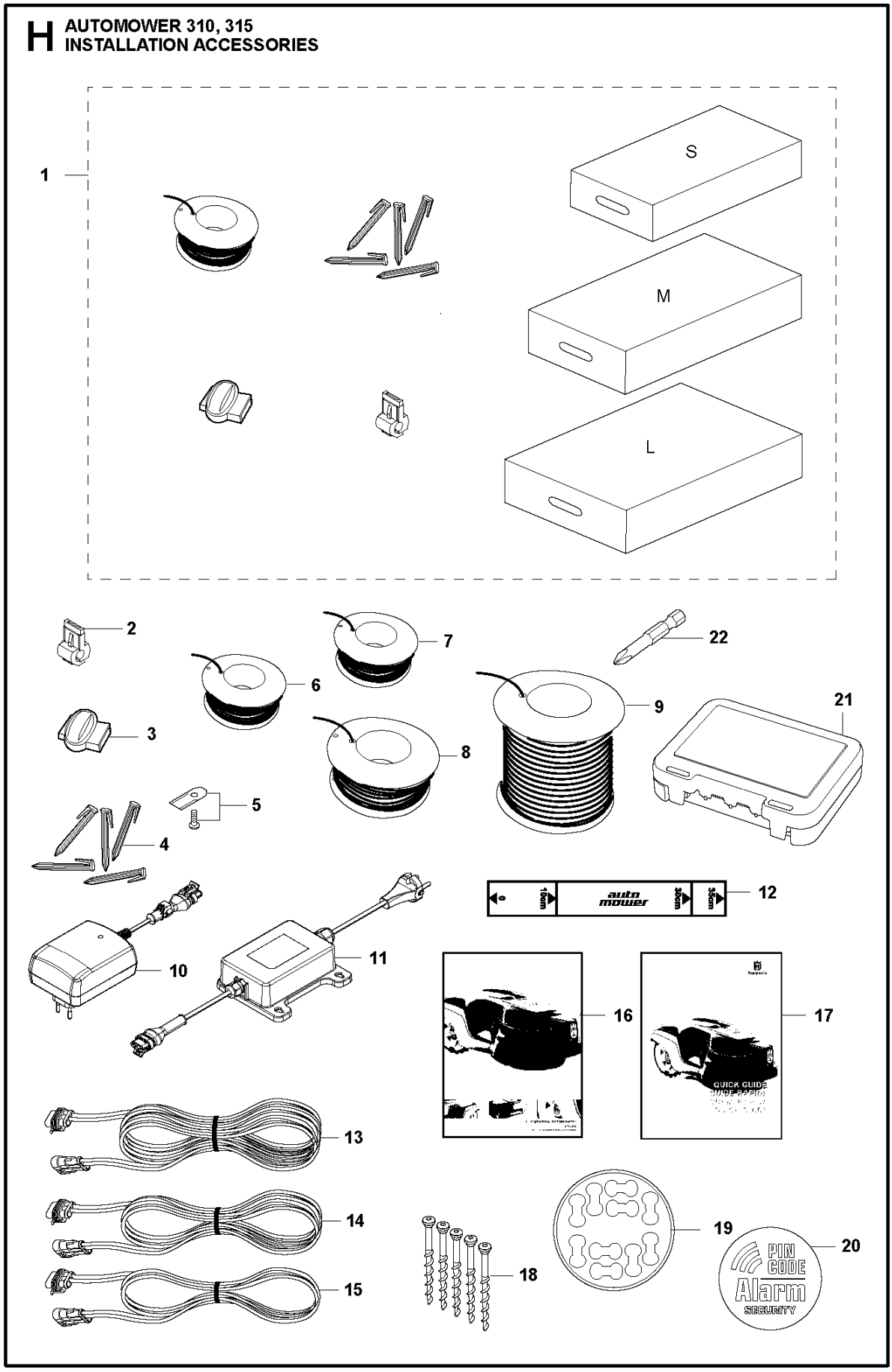
H
AUTOMOWER 310, 315
INSTALLATION ACCESSORIES
1
S
M
L
2
3
4
5
6
7
8
9
10
11
12
22
21
16
17
QUICK GUIDE
13
14
15
18
19
20
PIN CODE
Alarm
SECURITY

Reference	Artikelnummer	Varenavn	Antal	Kommentar
1	967623601	INSTALLATION KIT	1	Installation KIT S: Wire (150 m), Staples (300 pcs), Connectors (3 pcs), Couplers (5 pcs)
1	967623602	INSTALLATION KIT	1	Installation KIT M: Wire (250 m), Staples (400 pcs), Connectors (3 pcs), Couplers (5 pcs)
1	967623603	INSTALLATION KIT	1	Installation KIT L: Wire (400 m), Staples (600 pcs), Connectors (5 pcs), Couplers (5 pcs)
2	535129001	KONTAKT	1	Loop Wire Connector
2	535129002	KONTAKT	1	Loop Wire Connector, Blister Pack, 100 pcs
2	577864801	KONTAKT	1	Loop Wire Connector, Blister Pack, 5 pcs
3	501980201	KOPPLING	1	Coupler
3	501980203	KOPPLING	1	Coupler, 100 pcs
3	577864701	KOPPLING	2	Coupler, Blister Pack, 5 pcs
4	583973401	KLAMMER	1	Staples, 100 pcs
5	577606604	BLADE SET	1	Long Life - Safety Blade, 300 pcs
5	577864603	BLADE SET	1	Long Life - Safety Blade, Blister Pack, 9 pcs
5	577606505	BLADE SET	1	Long Life - Safety Blade, 45 pcs
6	577864302	KABEL	1	Wire, Blister Pack, (50 m)

6	597237801	KABEL	1	Wire (150 m)
7	580662006	KABEL	1	Wire (250 m)
8	522914102	KABEL	1	Wire (500 m)
9	580662004	KABEL	1	Wire (800 m)
10	593163601	POWER SUPPLY UNIT	1	Power Supply Unit EU
11	590442202	DRIVENHED	1	Power Supply Unit UK, IE
11	590442203	POWER SUPPLY UNIT	1	Power Supply Unit CH
11	590442204	DRIVENHED	1	Power Supply Unit US, CA
11	590442206	DRIVENHED	1	Power Supply Unit JP
11	584862601	DRIVENHED	1	EU
11	584862605	DRIVENHED	1	Power Supply Unit AU, NZ
11	529532610	DRIVENHED	1	Power Supply Unit CN
12	544177501	MÅLEBÅND	1	Measuring Tape
13	579825101	KABLAGE KPL	1	Low voltage cable 20m
14	579825102	KABLAGE KPL	1	Low voltage cable 10m
15	579825103	KABLAGE KPL	1	Low Voltage Cable (3 m)
15	579825104	KABLAGE KPL	1	Low Voltage Cable (5 m)
18	597435801	SCREW	1	6 pcs+Key

19	586277901	MÆRKAT	1	Sticker, Cable Markers, 10 pcs
20	579571201	MÆRKAT	1	Label Alarm
21	590855001	OPBEVARINGSKASSE	1	Cable Connector Protection
22	596339801	VÆRKTØJ	1	

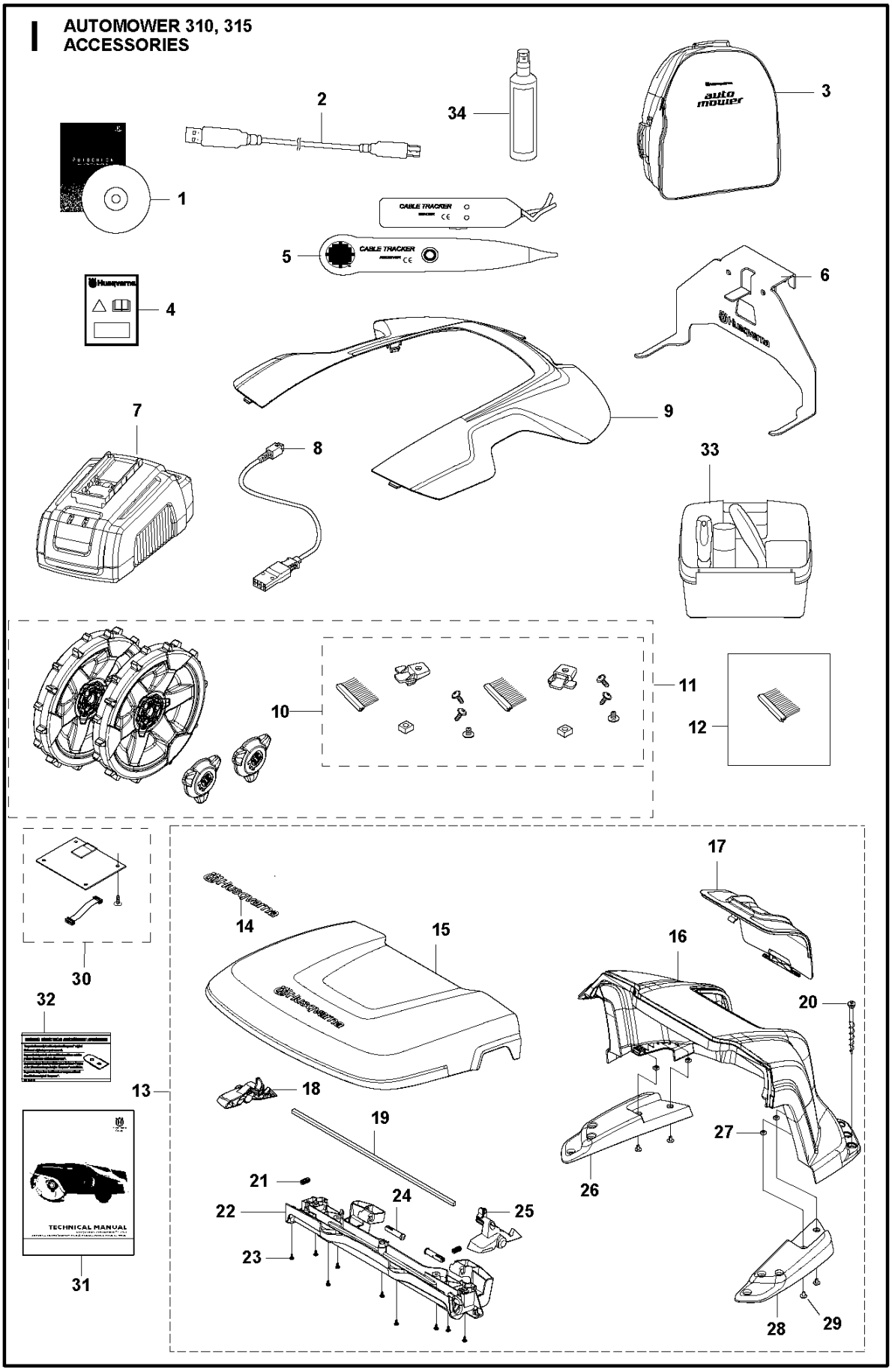
AUTOMOWER 310, 315
ACCESSORIES
1
2
3
4
5
6
7
8
9
10
11
12
13
14
15
16
17
18
19
20
21
22
23
24
25
26
27
28
29
30
31
32
33
34
CABLE TRACKER
TECHNICAL MANUAL

Reference	Artikelnummer	Varenavn	Antal	Kommentar
2	577518102	KABEL	1	Service Cable (USB)
4	580689502	MÆRKAT	1	Warranty Seal 1pcs
5	577606801	TESTUDSTYR	1	Interruption Detector
6	587224001	WALL HANGER	1	Wallhanger 310/315
7	588408401	BATTERIOPLADER	1	Quick Charger with Battery Test
8	588202601	KABLAGE KPL	1	Cable Quick Charger
9	587235801	BODY KIT	1	Top Cover Grey
9	587235802	BODY KIT	1	Top Cover White
9	587235803	BODY KIT	1	Top Cover Orange
10	587235701	BØRSTESÆT	1	Wheel Brush KIT (Holder x2, Brush x6)
11	587235301	WHEEL KIT	1	Terrain KIT (Brush KIT + Rear wheels)
12	505132803	BØRSTESÆT	1	Brush, 6 pcs
13	587236101	HUS	1	House KIT
14	577469001	MÆRKAT	1	Decal
15	585323501	DÆKSEL	1	Lid
16	586993801	DÆKSEL	1	Cover Base

17	585323602	LEM	1	Hatch
18	585324002	HÅNDTAG	1	Handle Left
19	585324101	LED	1	Rod
20	597435801	SCREW	1	Screw KIT, 6 pcs
21	580511401	FJEDER	2	Spring
22	585341601	BJÆLKE	1	Beam
23	575543314	SCREW	9	Screw
24	585341501	AXEL	2	Hinge Pin
25	585324001	HÅNDTAG	1	Handle Right
26	585323802	STØTTE	1	Support Left
27	503226601	MØTRIK 4-KANTET	4	Square Nut
28	585323801	STØTTE	1	Support Right
29	535129303	SKRUE IHPANM	4	Screw
30	586662314	GPS MODULE	1	AM Connect, Kit US/CA, From 2016 models
30	586662315	GPS MODULE	1	AM Connect, Kit, From 2016 models
32	591374101	MÆRKAT	1	Original Parts Sticker
32	591374102	MÆRKAT	1	Original Parts Sticker
32	591374103	MÆRKAT	1	Original Parts Sticker

33	590855101	MAINTENANCE KIT	1
34	593967901	SPRAY	1