2026-11-17

Husqvarnas Automower® 305E NERA



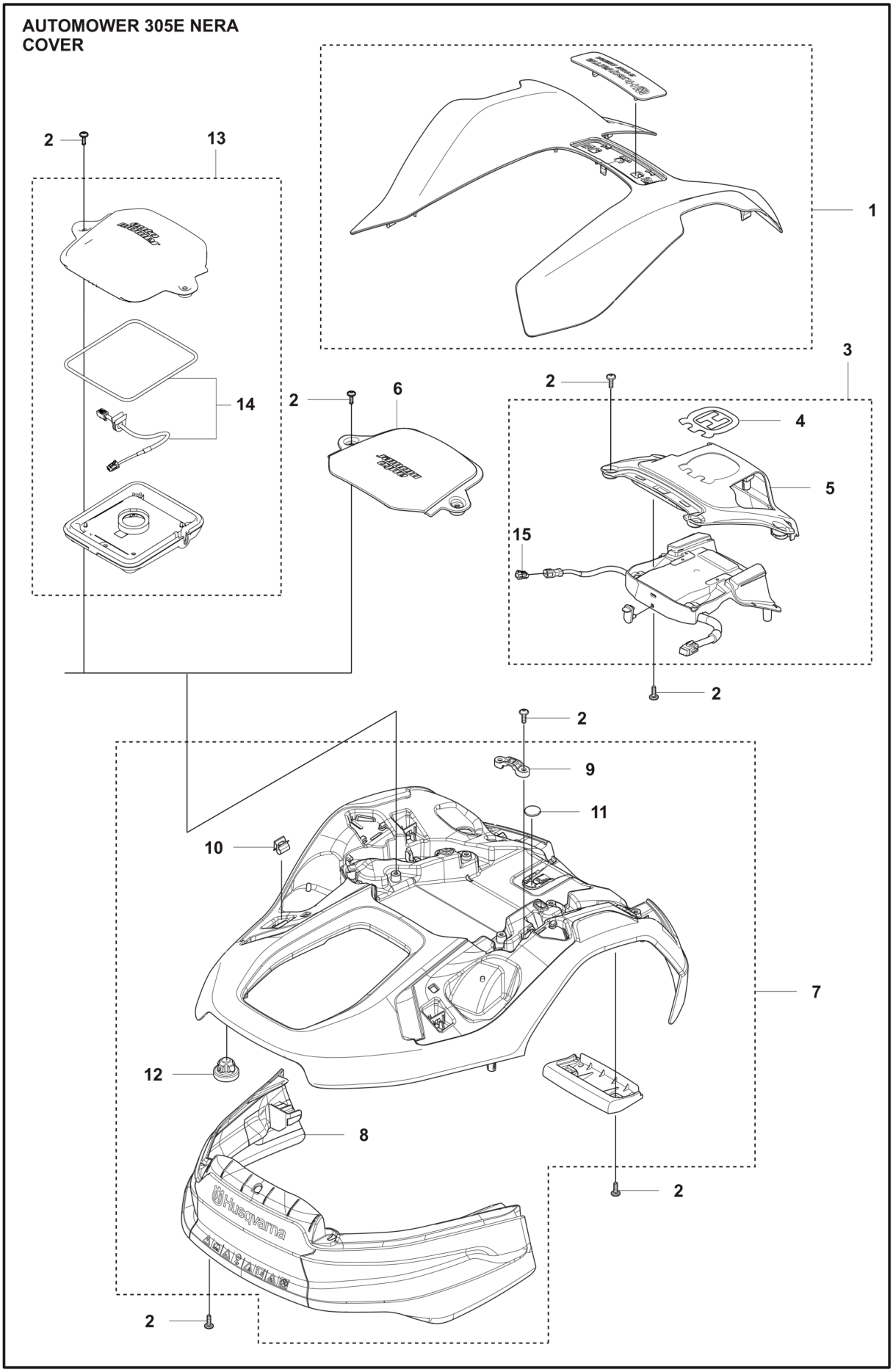
AUTOMOWER 305E NERA
COVER
1
2
3
4
5
6
7
8
9
10
11
12
13
14
15
2
2
2
2
2
2
Husqvarna

Reference	Artikelnummer	Varenavn	Antal	Kommentar
1	538890201	COVER ASSY	1	Top cover kit
2	574450101	SKRUE ITXPANT	18	
3	546525502	DÆKSELSÆT	1	Nose module kit
4	587423502	MÆRKAT	1	Husqvarna crown
5	536997901	HUS	1	Nose cover
6	536997801	PANEL	1	Accessory cover, Up to S/N 2540XXXXX
7	546521802	BODY KIT	1	
8	536997401	KOFANGER	1	Rear bumper
9	593355202	OVERFALD	1	
10	593778401	KLEMME	6	
11	593822101	MAGNET	1	
12	546632301	KOBLING	4	Snaploc
13	970862201	EPOS MODULE	1	EU, From S/N 2541XXXXX
13	970862206	EPOS MODULE	1	NZ, From S/N 2541XXXXX
13	970862207	EPOS MODULE	1	AU, From S/N 2541XXXXX
13	970862208	EPOS MODULE	1	JP, From S/N 2541XXXXX
14	547340401	LEDNING KPL	1	Kit, From S/N 2541XXXXX
15	536464501	TÆTNINGSPROP	1	

AUTOMOWER 305E NERA
CONSOLE

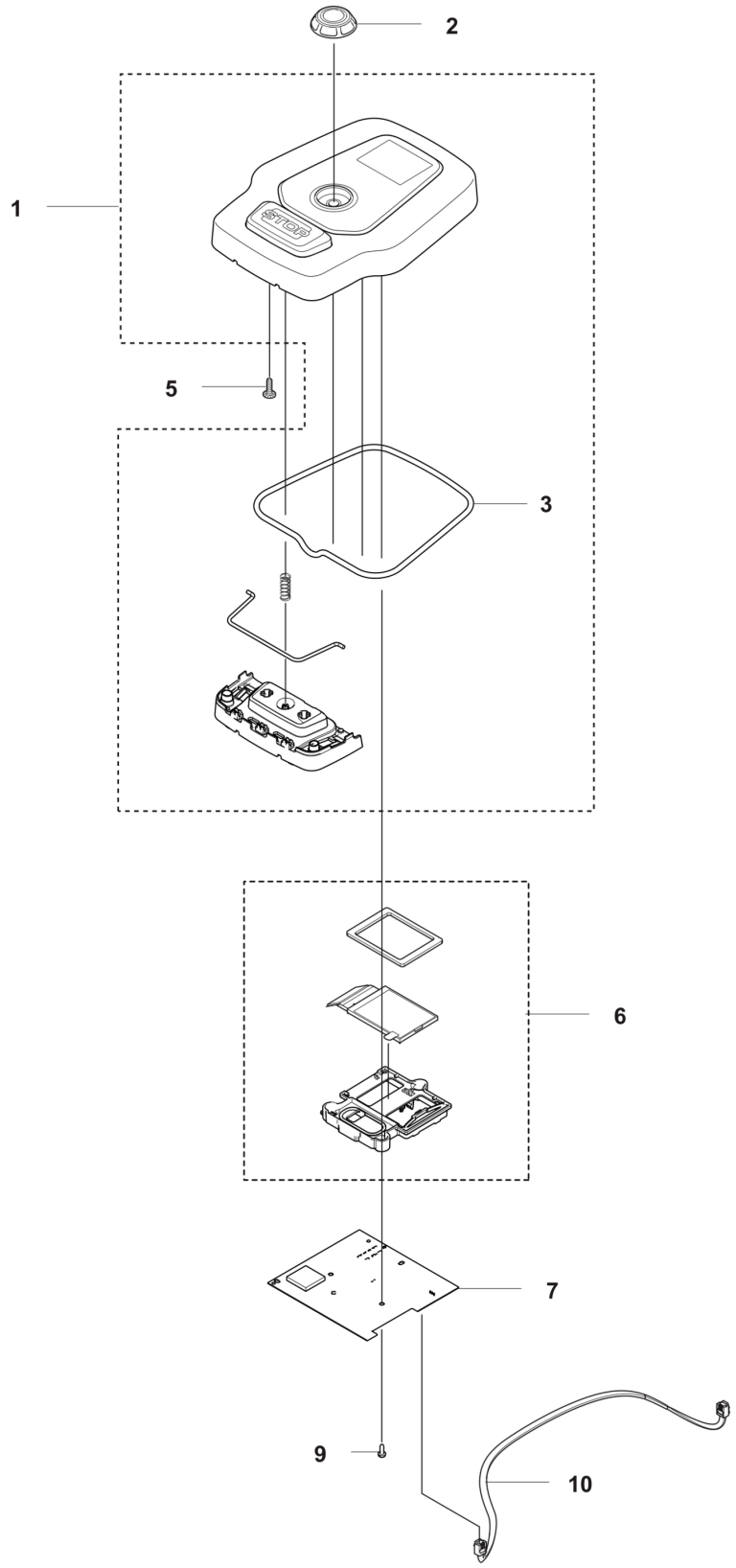

Reference	Artikelnummer	Varenavn	Antal	Kommentar
1	548084702	DÆKSELSÆT	1	
2	531375901	KNOP	1	Jog Wheel
3	599911803	TÆTNING	1	Sealing strip
5	574450101	SKRUE ITXPANT	4	Screw
6	538822401	DISPLAY KIT	1	
7	599702701	KREDSKORT	1	Application circuit board
9	525887402	SCREW CITXPANT	3	
10	536253905	LEDNING KPL	1	Wiring Assy Magnetic sensor

AUTOMOWER 305E NERA
CHASSIS UPPER

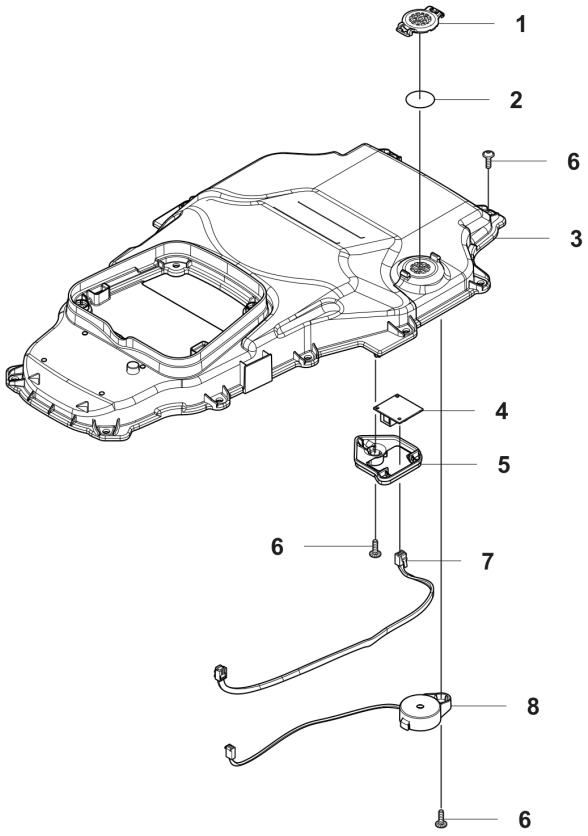

Reference	Artikelnummer	Varenavn	Antal	Kommentar
1	586038902	DÆKSEL	1	Cover air filter
2	577753701	LUFTFILTER	1	Air filter
3	536969902	CHASSIS	1	Chassis upper
4	591125501	KREDSKORT	1	Magnetic sensor circuit board
5	535563901	HOLDER	1	Holder magnetic sensor curcuit board
6	574450101	SKRUE ITXPANT	14	
7	536253911	LEDNING KPL	1	Wiring Assy Magnetic sensor
8	531351802	LEDNING KPL	1	Buzzer

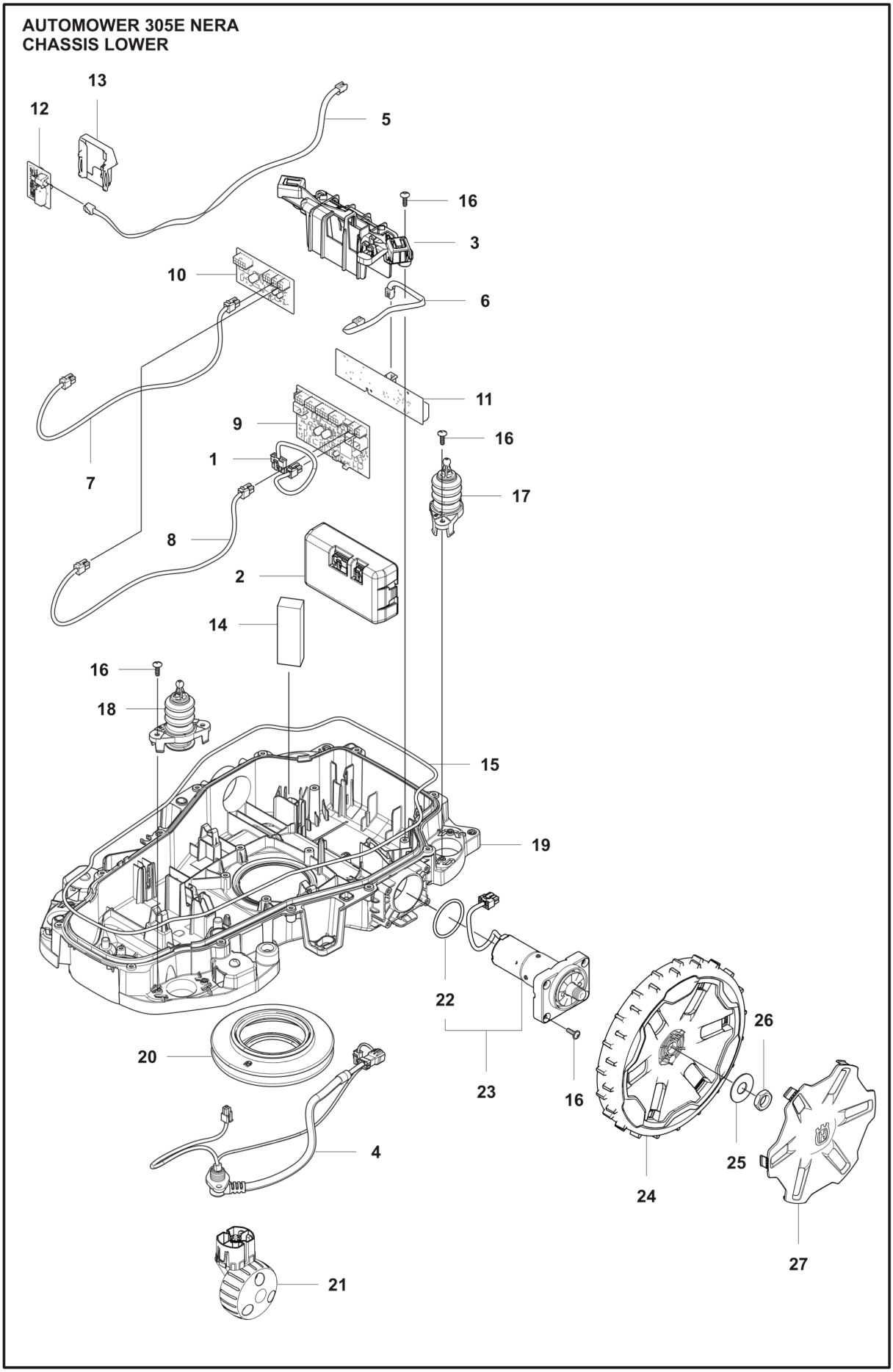
AUTOMOWER 305E NERA
CHASSIS LOWER
13
12
5
16
3
10
6
11
9
16
1
17
7
8
2
14
16
18
15
19
22
20
23
16
26
4
25
24
27
21

Reference	Artikelnummer	Varenavn	Antal	Kommentar
1	535280508	LEDNING KPL	1	Wiring assy battery
2	529452002	BATTERY	1	
3	536970901	FÆSTE	1	
4	546333602	LEDNING KPL	1	Main Cable
5	536253905	LEDNING KPL	1	Wiring assy loop sensor rear
6	536253908	LEDNING KPL	1	Wiring assy loop sensor front
7	547846804	LEDNING KPL	1	Wiring assy application board
8	547846804	LEDNING KPL	1	Wiring assy motor control
9	591125602	KREDSKORT	1	Motor control circuit board front
10	536657701	KREDSKORT	1	Motor control circuit board rear
11	546001101	KREDSKORT	2	Loop sensor circuit board front
12	536657101	KREDSKORT	1	Loop sensor circuit board front
13	538641201	RAMME	1	Holder loop sensor circuit board
14	598503604	VÆGT	2	
15	574874709	TÆTNINGSLISTE	1	
16	574450101	SKRUE ITXPANT	20	
17	531281201	JOYSTICK ASSY	2	Joysstick lift & collision front
18	531281301	JOYSTICK ASSY	2	Joysstick collision rear
19	548084301	CHASSIS	1	Chassis lower

20	599318301	BÆLG	1	
21	547412801	HJUL KPL	2	Rear wheel
22	580443902	O-RING	2	
23	599683402	WHEEL MOTOR ASSY	2	Wheel motor
24	538816501	HJUL KPL	2	Front wheel
25	586210601	SKIVE	1	
26	731432401	HEXAGON TYND	2	
27	531380502	NAVKAPSEL	2	

AUTOMOWER 305E NERA
BLADE MOTOR & CUTTING EQUIPMENT

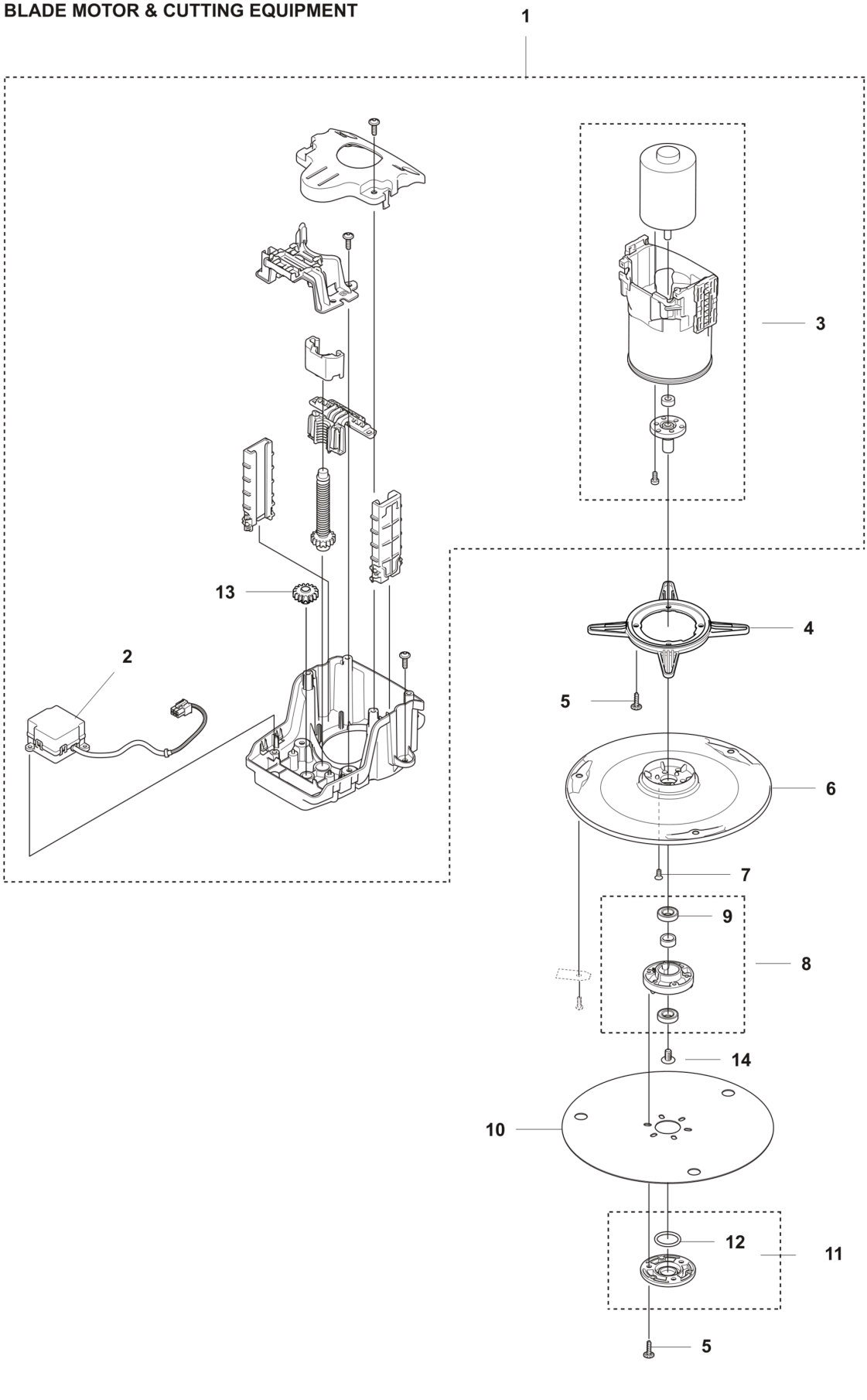

Reference	Artikelnummer	Varenavn	Antal	Kommentar
1	546838902	CUTTING MODULE	1	Cutting module
2	592735803	HEIGHT ADJUSTMENT MOTOR	1	Cutting height adjustment motor
3	599428302	CUTTER MOTOR ASSY	1	Cutting motor front
4	599318201	RAMME	1	
5	575543314	SCREW	3	
6	531177401	SKÆRESKIVE	1	Blade disc
7	590508701	SCREW	3	
8	588421702	LEJEHUS KPL.	1	
9	535075703	KUGLELEJE	2	
9	593080801	KUGLELEJE	2	Tube 50 pcs
10	598794801	FRIKTIONSPLADE	1	
11	587449601	DÆKSELSÆT	1	Bearing cover
12	585297501	O-RING	1	
13	599317601	TANDHJUL	1	
14	535076001	SCREW	1	

AUTOMOWER 305E NERA
BLADE MOTOR AND CUTTING EQUIPMENT

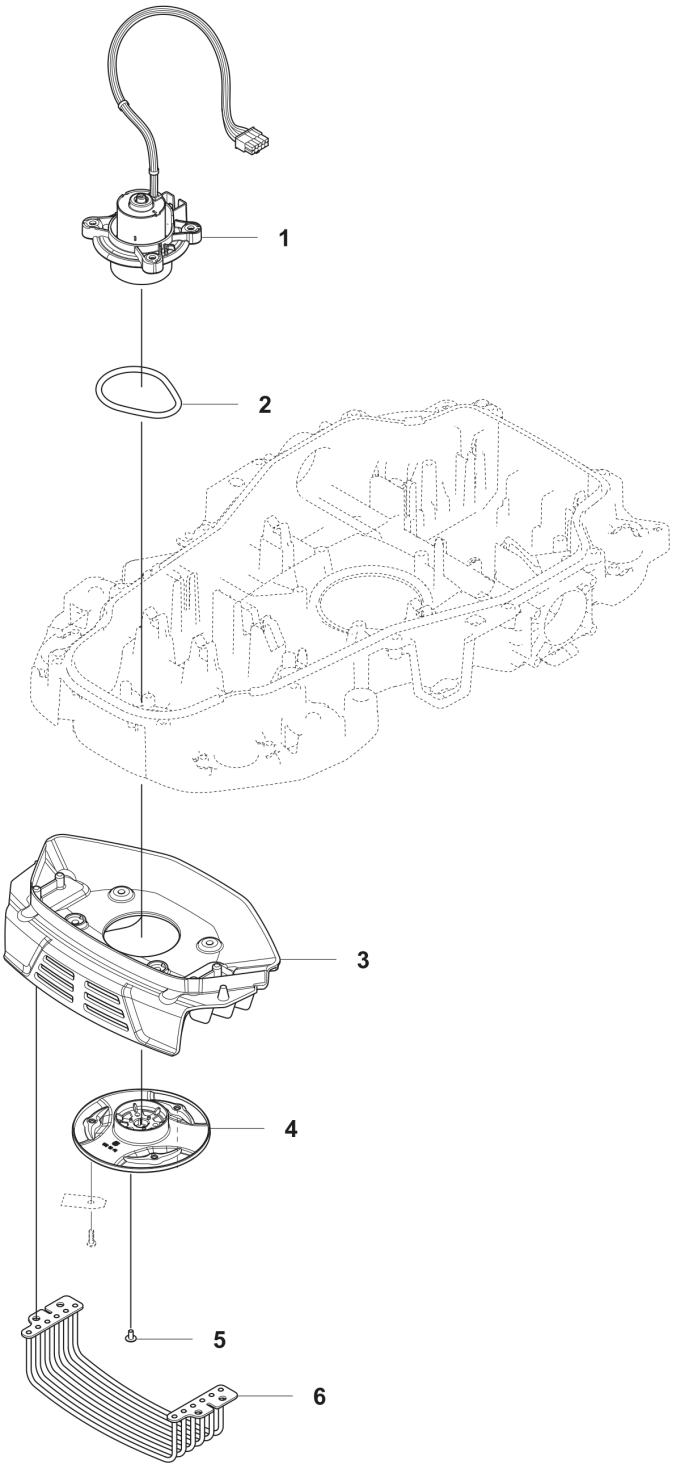

Reference	Artikelnummer	Varenavn	Antal	Kommentar
1	548084401	CUTTER MOTOR ASSY	1	Cutting motor rear
2	529516301	PAKNING	1	
3	547596301	SKÆRM	1	Blade disc guard
4	536984301	SKÆRESKIVE	1	
5	590508701	SCREW	3	
6	547596401	DÆKSEL	1	Blade disc guard

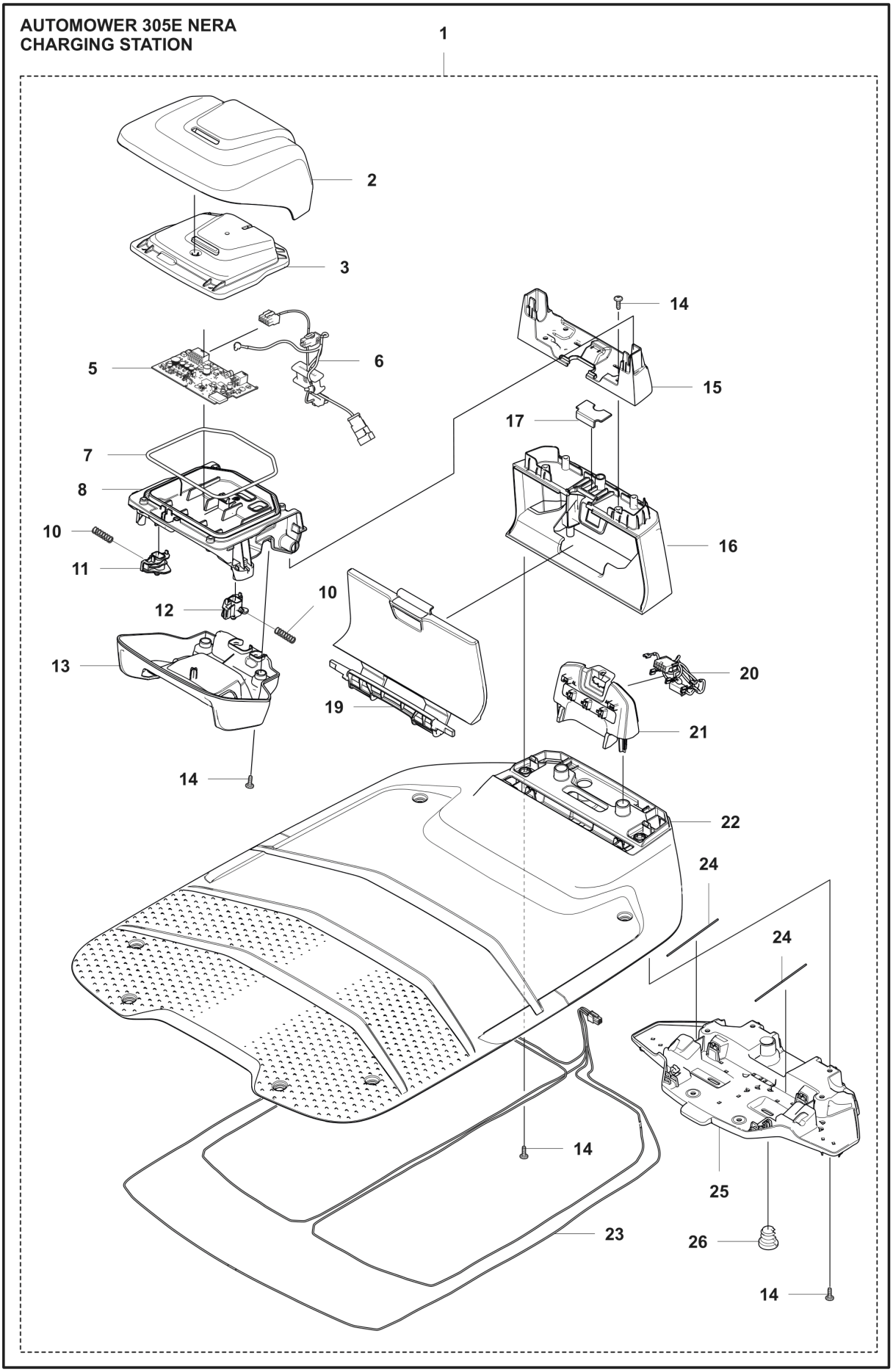
AUTOMOWER 305E NERA
CHARGING STATION
1
2
3
5
6
14
15
17
7
8
16
10
11
12
10
13
19
20
21
14
22
24
24
14
25
23
26
14

Reference	Artikelnummer	Varenavn	Antal	Kommentar
1	531422302	LADESTATION	1	
2	531422502	HAT	1	Upper Cover
3	531422902	DÆKSEL	1	
5	529899501	KREDSKORT	1	Charging station circuit board
6	536055201	LEDNING KPL	1	Wiring Assy CS Main
7	574874708	TÆTNINGSLISTE	1	
8	531423002	RAMME	1	
10	535130101	FJEDER	2	
11	531422601	KLAP	1	Contact Plate Left
12	531422602	KLAP	1	Contact Plate Right
13	531422701	HYLSTER	1	Lower Cover
14	574450101	SKRUE ITXPANT	12	
15	535558603	STØTTE	1	
16	531422401	HUS	1	
17	536177201	DÆKSEL	1	
19	531422802	LEM	1	
20	535600701	LEDNING KPL	1	Wiring Assy Antenna bridge
21	535600601	HUS	1	Cable Holder
22	531423103	BASEPLATE	1	Charging Station Baseplate
23	536166001	LEDNING KPL	1	Wiring Assy Baseplate
24	588470201	FJEDER	2	
25	535600501	ANKERPLADE	1	Baseplate Support
26	531262701	PROP	1	

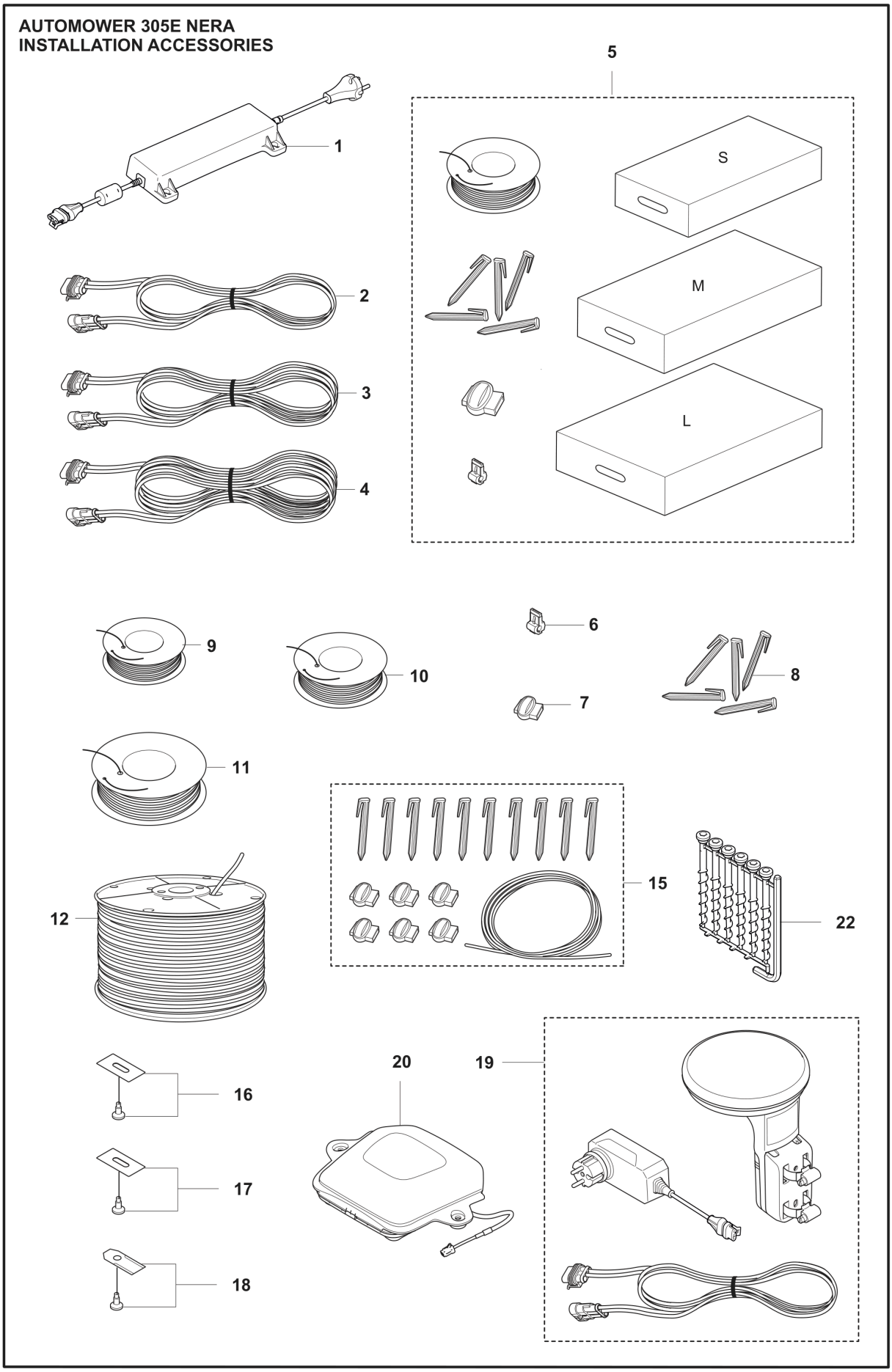
AUTOMOWER 305E NERA
INSTALLATION ACCESSORIES
1
2
3
4
5
S
M
L
6
7
8
9
10
11
12
15
16
17
18
19
20
22

Reference	Artikelnummer	Varenavn	Antal	Kommentar
1	599628501	DRIVENHED	1	EU
1	599628502	DRIVENHED	1	GB,IE
1	599662503	DRIVENHED	1	CH
1	599628504	DRIVENHED	1	US/CA
1	599662505	DRIVENHED	1	AUS/NZ
2	579825103	KABLAGE KPL	1	Low Voltage Cable 3 m
3	579825104	KABLAGE KPL	1	Low Voltage Cable 5 m
4	579825101	KABLAGE KPL	1	Low Voltage Cable 20 m
4	579825102	KABLAGE KPL	1	Low Voltage Cable 10 m
5	967972101	INSTALLATION KIT	1	S Wire 150 m, Staples 300 pc, Connectors 3 pcs, Couplers 5 pcs
5	967972201	INSTALLATION KIT	1	M Wire 250 m, Staples 400 pc, Connectors 3 pcs, Couplers 5 pcs
5	967972301	INSTALLATION KIT	1	L Wire 400 m, Staples 600 pc, Connectors 5 pcs, Couplers 5 pcs
6	535129002	KONTAKT	1	Loop Wire Connector, Blister Pack 100 pcs
6	577864801	KONTAKT	1	Loop Wire Connector
7	536085402	KOPPLING	1	Coupler, 5pcs
7	536085403	KOPPLING	1	Coupler, 100 pcs
8	577864201	KLAMMER	1	100 pcs
9	597237802	KABEL	1	Wire, 50m
10	597237801	KABEL	1	Wire, 150m
11	580662006	KABEL	1	Wire, 250m

12	580662009	KABEL	1	Wire, 800m
12	593297702	KABEL	1	Wire, 300m
12	522914102	KABEL	1	Wire, 500m
15	597539501	REPARATIONSSÆT	1	Boundary wire repair kit
16	595084401	BLADE SET	1	Endurance Blade, 6 pcs
16	595084402	BLADE SET	1	Endurance Blade, 45 pcs
16	595084403	BLADE SET	1	Endurance Blade, 300 pcs
17	599805201	BLADE SET	1	Endurance HSS Blades 6 pcs
17	599805202	BLADE SET	1	Endurance HSS Blades 45 pcs
17	599805203	BLADE SET	1	Endurance HSS Blades 300 pcs
18	577606505	BLADE SET	1	Blades 45 pcs incl. Screws
18	577606604	BLADE SET	1	Blades 300 pcs incl. Screws
18	577864603	BLADE SET	1	Blades 9 pcs incl. Screws
18	599805301	BLADE SET	1	Blades 45 pcs
18	599805302	BLADE SET	1	Blades 300 pcs
19	970663301	REFERENCE STATION	1	EU
19	970663303	REFERENCE STATION	1	GB,IE
19	970663304	REFERENCE STATION	1	CH
20	970663201	EPOS MODULE	1	
22	597435801	SCREW	1	Anchor screws, 6pcs

AUTOMOWER 305E
ACCESSORIES

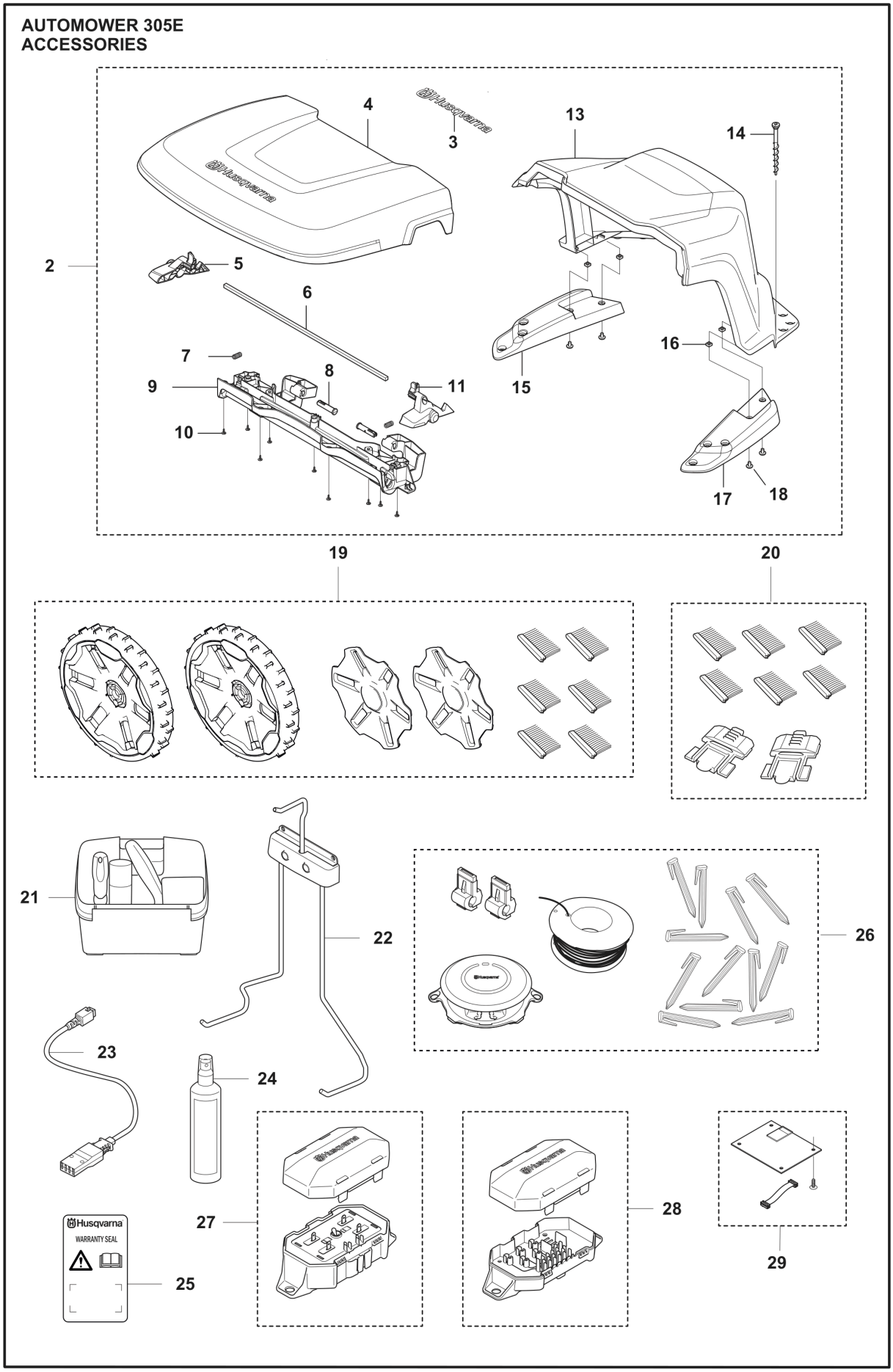

Reference	Artikelnummer	Varenavn	Antal	Kommentar
2	536664101	HUS	1	Automower House
3	577469001	MÆRKAT	1	
4	586885802	DÆKSEL	1	Kit
5	585324002	HÅNDTAG	1	
6	585324101	LED	1	
7	580511401	FJEDER	1	
8	585341501	AXEL	1	
9	585341601	BJÆLKE	1	
10	575543314	SCREW	1	
11	585324001	HÅNDTAG	1	
12	585323602	LEM	1	
13	536797201	HUS	1	Cover
14	597435801	SCREW	1	Screw kit
15	585323802	STØTTE	1	
16	503226601	MØTRIK 4-KANTET	1	
17	585323801	STØTTE	1	
18	535129303	SKRUE IHPANM	1	
19	536849202	WHEEL KIT	1	Terrain kit
20	597704601	BØRSTESÆT	1	Wheel Brush refill kit
21	590855101	MAINTENANCE KIT	1	Maintenance and Cleaning kit
22	536849302	WALL HANGER	1	
23	598013102	LEDNING KPL	1	Battery tester cable
24	593967901	SPRAY	1	Care and Shine Spray

25	580689502	MÆRKAT	1	Warranty seal
26	529880501	AFBRYDER	1	FlexiFence
27	529459701	AFBRYDER	1	Automower Area Switch
28	599801701	OPBEVARINGSKASSE	1	Connector protection box
29	586662315	GPS MODULE	1	Connect Module