2026-10-09

HUSQVARNA 240e



A 235e, 236e, 240e
CHAIN BRAKE ASSY

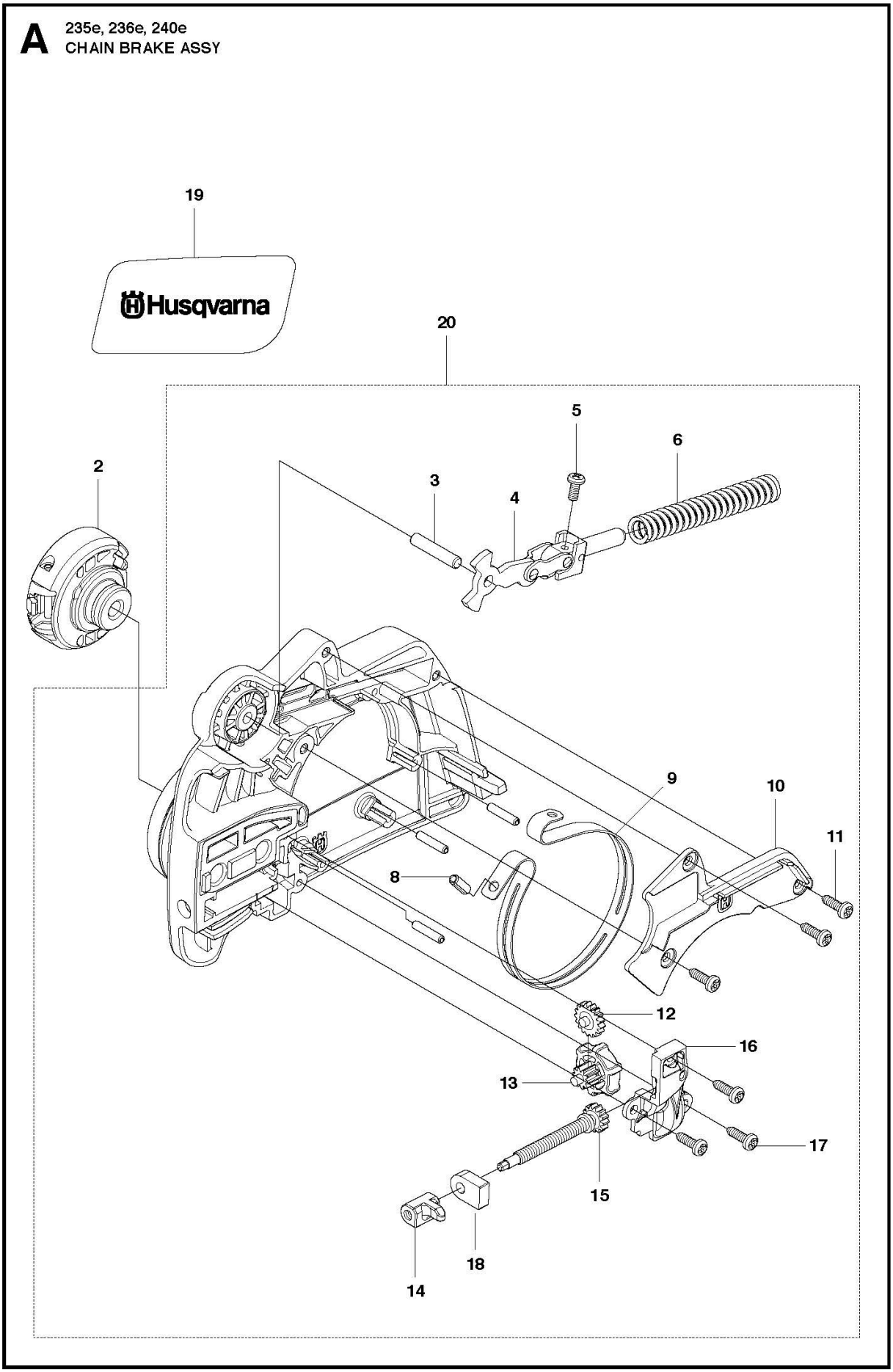

Reference	Artikelnummer	Varenavn	Antal	Kommentar
2	579070601	KNOP	1	
3	530057950	PIN. DOWEL	1	
4	530057940	ASSY. FRONT LINK	1	
5	574780301	SCREW	1	
6	530016415	SPRING COMPRESSION	1	
8	530015913	PENNE	1	
9	530057923	BREMSEBÅND	1	
10	545071001	COVER	1	From 20080100001 up to 20144000000
10	525743001	COVER	1	From 20144000001
11	545227101	SCREW	3	
12	545060201	GEAR	1	
13	525884201	WORM GEAR ASSY	1	
14	545060502	JUSTERINGSAKSEL	1	From 20080100001 up to 20101400000
14	574201701	PENNE	1	From 20101400001
15	545065901	JUSTERING	1	
16	545059201	COVER	1	

17	545227101	SCREW	3	
18	545149301	KLEMME	1	From 20080100001 up to 20144000000
18	525354301	LEJEBØSNING	1	From 20144000001
19	545118601	MÆRKAT	1	
20	525611401	KÆDEBREMSE	1	

C **235, 235e, 236, 236e, 240, 240e**
CLUTCH AND OIL PUMP

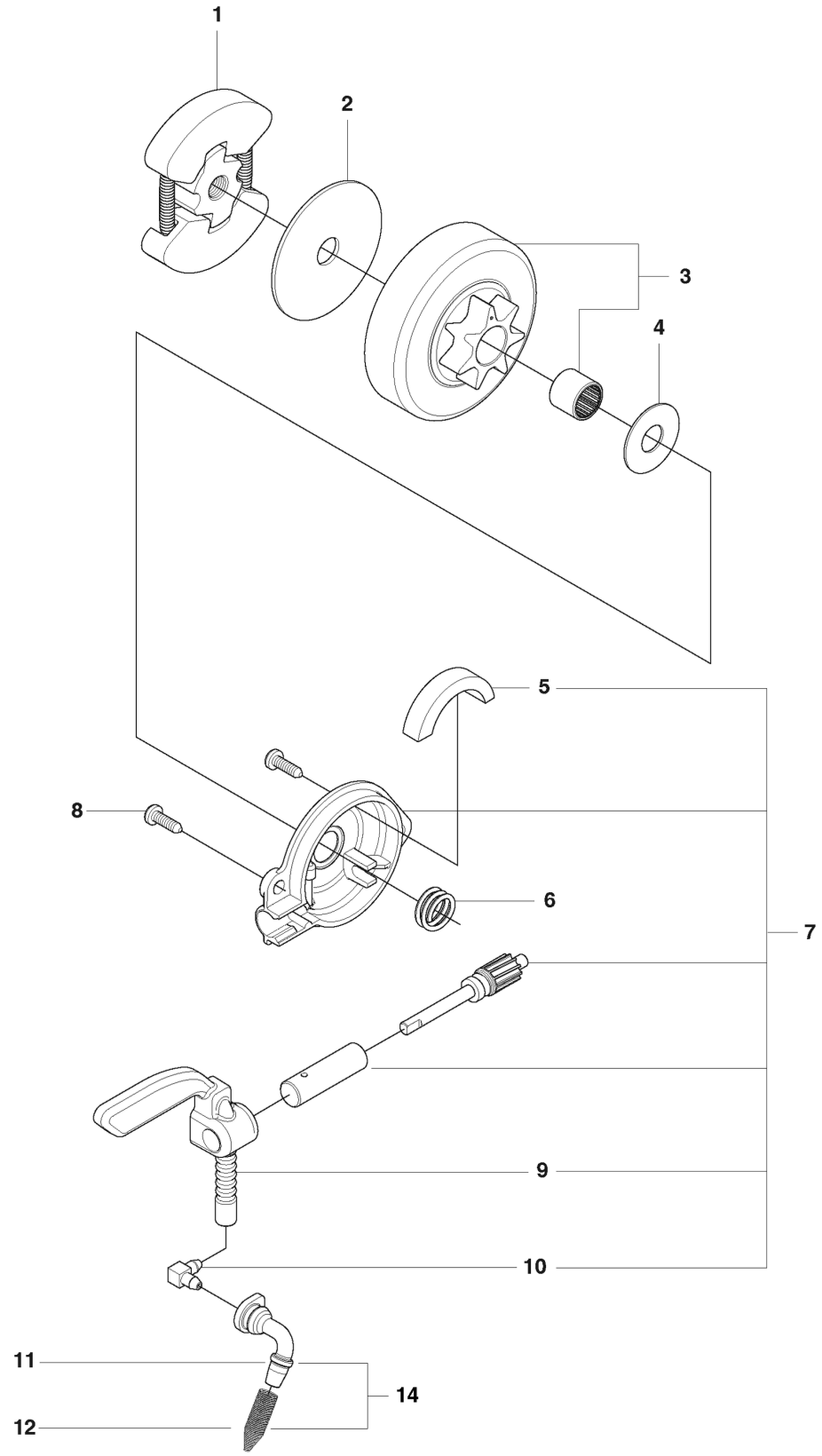

Reference	Artikelnummer	Varenavn	Antal	Kommentar
1	530014949	KOBLING	1	
2	530015611	SKIVE	1	
3	530047061	KOBLINGSTROMLE KPL	1	3/8 6-Tooth
3	530048132	KOBLINGSTROMLE	1	.325 7-tooth
4	579621501	SKIVE	1	From 20144000001
4	530015907	SKIVE	1	From 20080100001 up to 20144000000
5	525318401	STØVTÆTNING	1	From 20101400001
6	530037820	SNEKKEGEAR	1	
7	581063901	OLIEPUMPE KPL	1	From 20144000001
8	530016064	SCREW	2	From 20080100001 up to 20101400000, from 20144000001
8	545227101	SCREW	1	From 20101400001 up to 20144000000
9	545069201	OLIE	1	From 20080100001 up to 20091400000
9	545227501	KLODS	1	From 20091400001
10	530049477	VINKELRØR	1	
11	545069401	TÆTNING	1	
12	530056533	NET	1	

14	545069501	PICK UP ASSEMBLY OIL TANK	1	From 20080100001 up to 20144000000

D 235, 235e, 236, 236e, 240, 240e
COVER

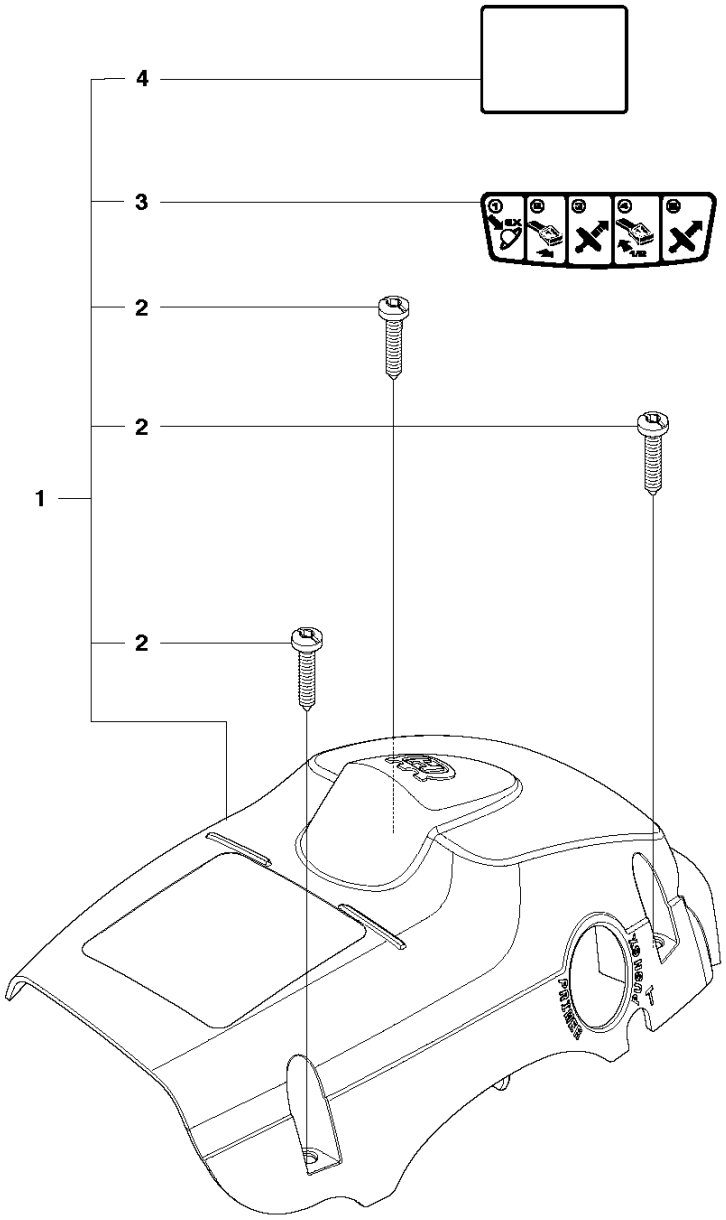

Reference	Artikelnummer	Varenavn	Antal	Kommentar
1	576543201	CYLINDERDÆKSEL KPL	1	
2	574320601	SCREW	3	SCREWS STRIPPED SEE SB1200019
3	545116502	MÆRKAT	1	
4	545165957	STOPPLADE	1	
5	579173401	SÆT	1	SEE SB1200019

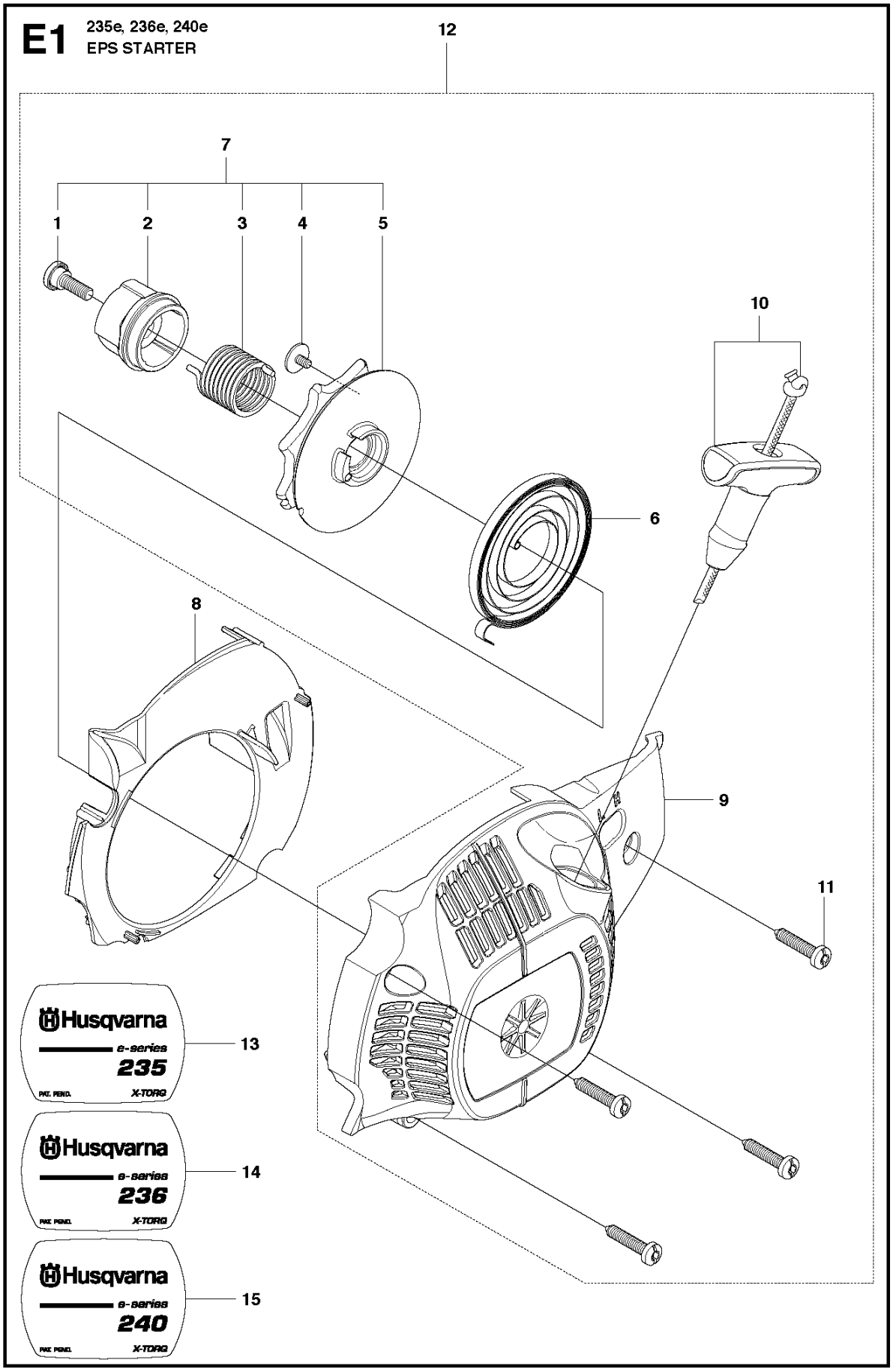
E1
235e, 236e, 240e
EPS STARTER
12
7
1
2
3
4
5
10
6
8
9
11
Husqvarna
e-series
235
PAT. PEND.
X-TORQ
13
Husqvarna
e-series
236
PAT. PEND.
X-TORQ
14
Husqvarna
e-series
240
PAT. PEND.
X-TORQ
15

Reference	Artikelnummer	Varenavn	Antal	Kommentar
1	530021179	SCREW	1	
2	530059677	MUFFE	1	
3	530021180	FJEDER	1	
4	530016080	SCREW	1	
5	545058201	REMSKIVE	1	
6	530042095	FJEDER	1	
7	530071966	SNORHJUL	1	
8	545063801	GNISTFANG	1	
9	545063701	VENTILATORDÆKSEL	1	
10	545010010	HÅNDTAG	1	
11	530016432	SCREW	4	
12	545008024	SÆT	1	
13	545118502	MÆRKAT	1	
14	575729701	MÆRKAT	1	From 20101400001
15	545118501	MÆRKAT	1	

F 235, 235e, 236, 236e, 240, 240e
IGNITION SYSTEM

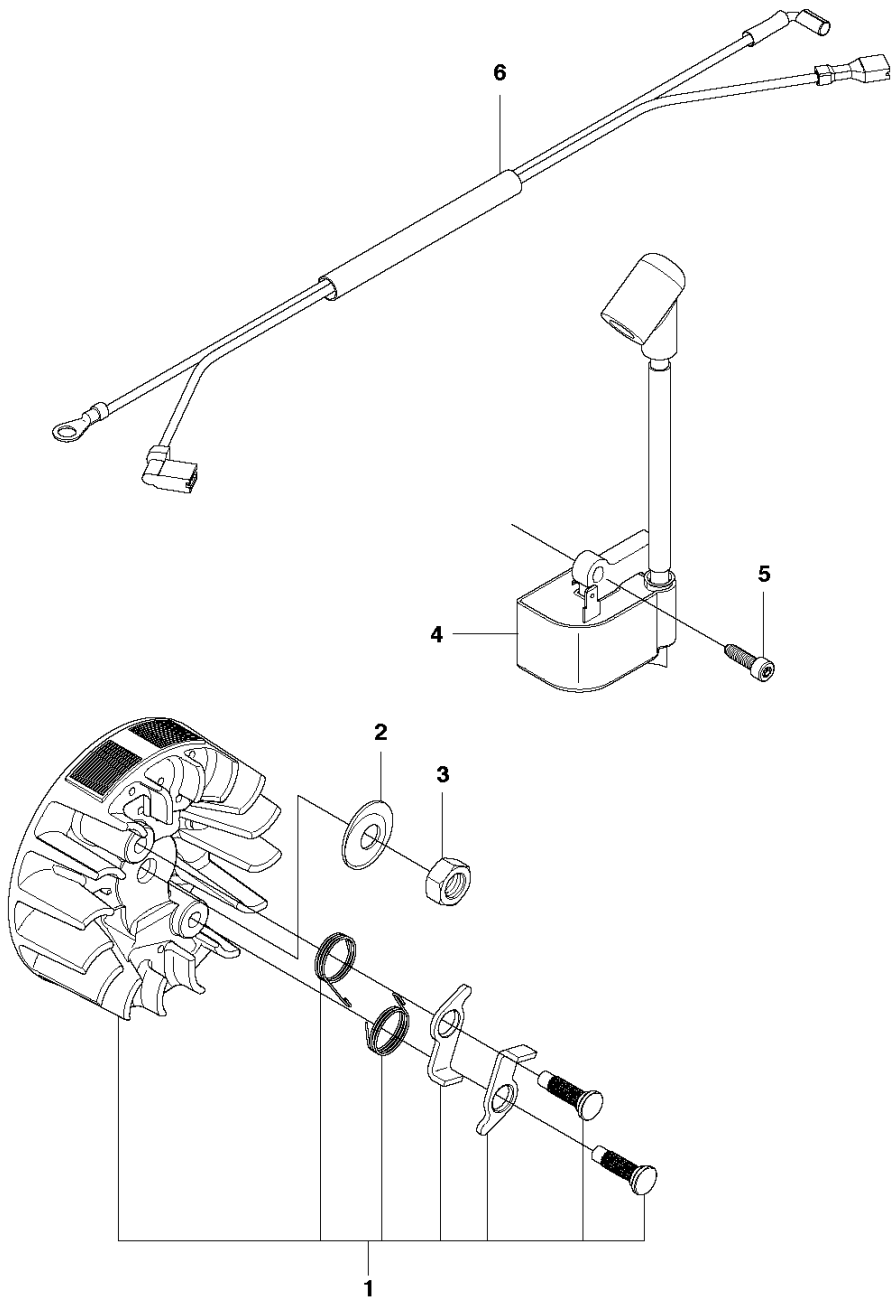

Reference	Artikelnummer	Varenavn	Antal	Kommentar
1	575635502	SVINGHJUL	1	
2	530015127	SKIVE	1	
3	530016134	MØTRIK	1	
4	575803501	MODUL	1	
5	545121901	SCREW	2	
6	545079901	ASSY- WIRE HARNESS	1	

G 235, 235e, 236, 236e, 240, 240e
MUFFLER

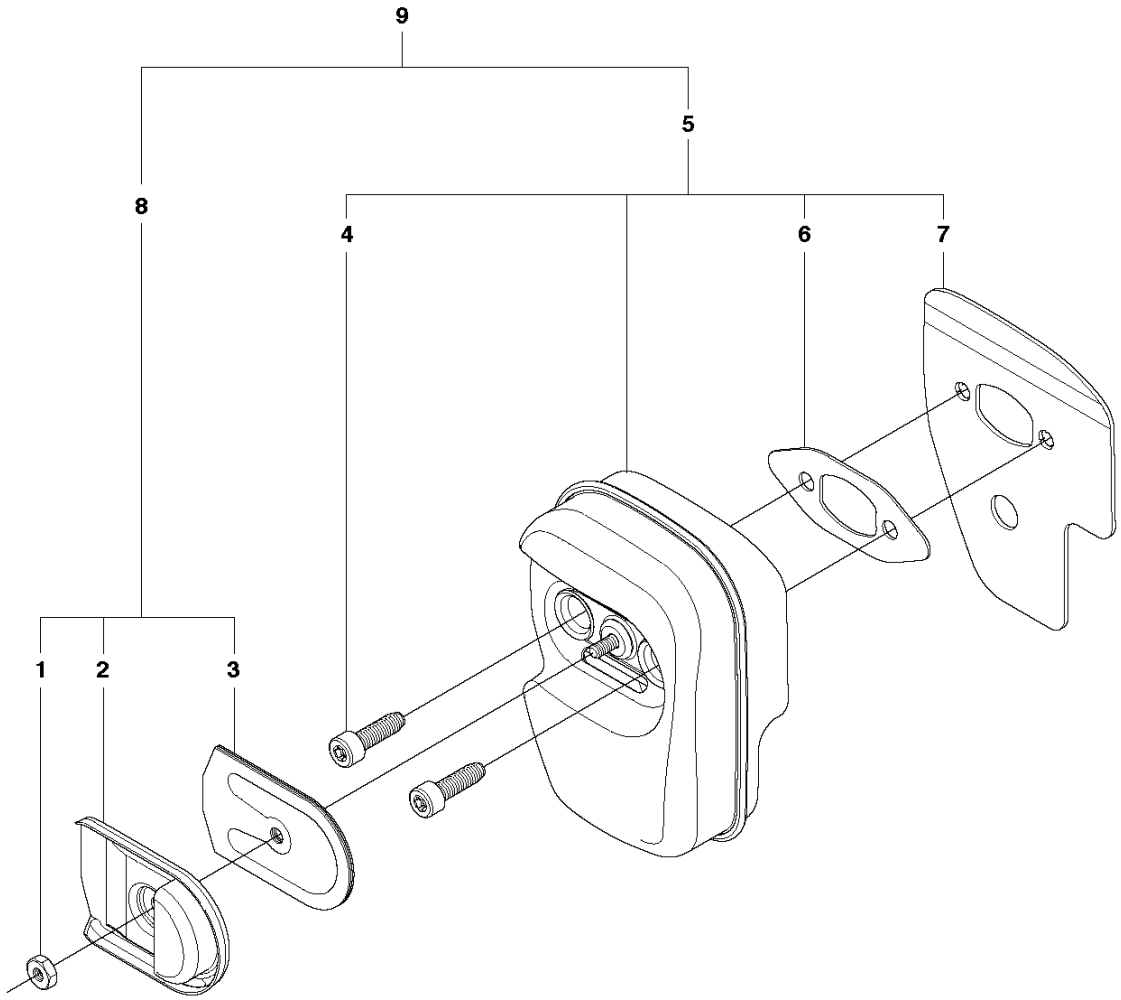

Reference	Artikelnummer	Varenavn	Antal	Kommentar
1	574266401	NUT	1	
2	545076901	EXHAUST PLATE	1	
3	545167401	NET	1	
4	530016338	BOLT	2	
5	586094301	LYDDÆMPER	1	
6	530054884	MUFFLER GASKET	1	
7	545066901	MUFFLER BACK PLATE	1	
8	545008027	SÆT	1	
9	545180843	LYDDÆMPER	1	

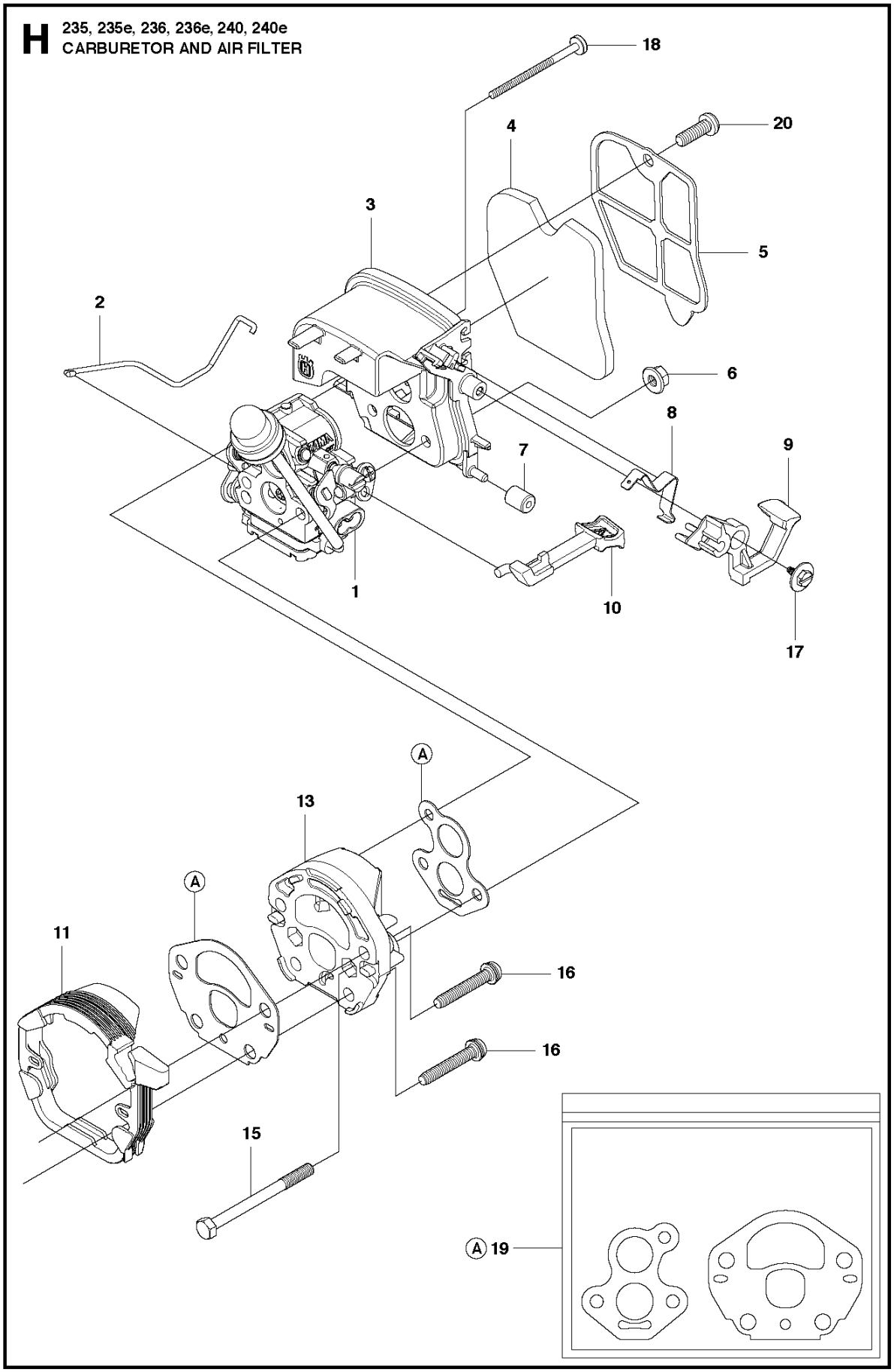
H
235, 235e, 236, 236e, 240, 240e
CARBURETOR AND AIR FILTER
18
20
4
3
5
2
6
8
9
7
1
10
17
A
13
A
11
16
16
15
A 19

Reference	Artikelnummer	Varenavn	Antal	Kommentar
1	586936202	KARBURATOR	1	
2	545062801	THROTTLE WIRE	1	
3	545062101	FILTERHOLDER	1	
4	545061801	LUFTFILTER	1	
5	545151801	PLADE	1	
6	530016101	MØTRIK	2	
7	545061901	ISOLATOR	1	
8	545063401	SWITCH. SPRING	1	
9	545061701	SWITCH LEVER	1	
10	545061601	CHOKE KNOB	1	
11	545061501	CARB ADAPTOR SEAL	1	
13	577636501	MELLEMSTYKKE	1	
15	545033701	STUD-CARBURETOR	2	
16	545158301	CARB ADAPTOR SCREW	4	
17	530016080	SCREW	1	
18	545074901	TOP STUD-CARBURETOR	1	

19	545081892	PAKNINGSSÆT	1
20	530016349	SCREW	1

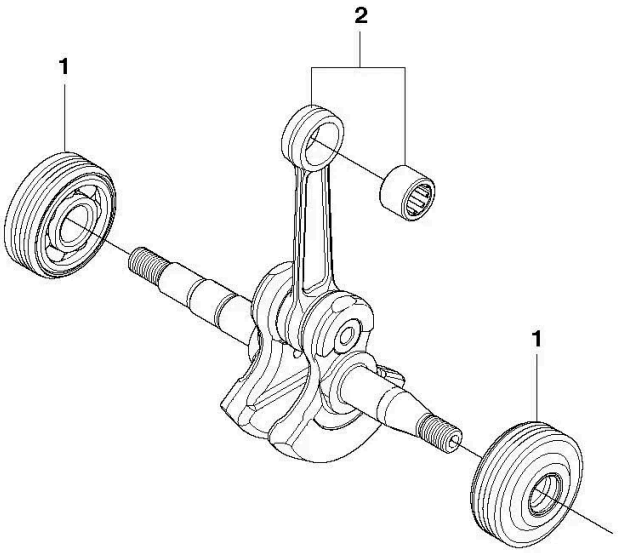
2
1
1

Reference	Artikelnummer	Varenavn	Antal	Kommentar
1	530056363	LEJE	2	From 20080100001 up to 20101400000
1	576243901	LEJE	2	From 20101400001
2	580302601	KRUMTAPAKSEL	1	

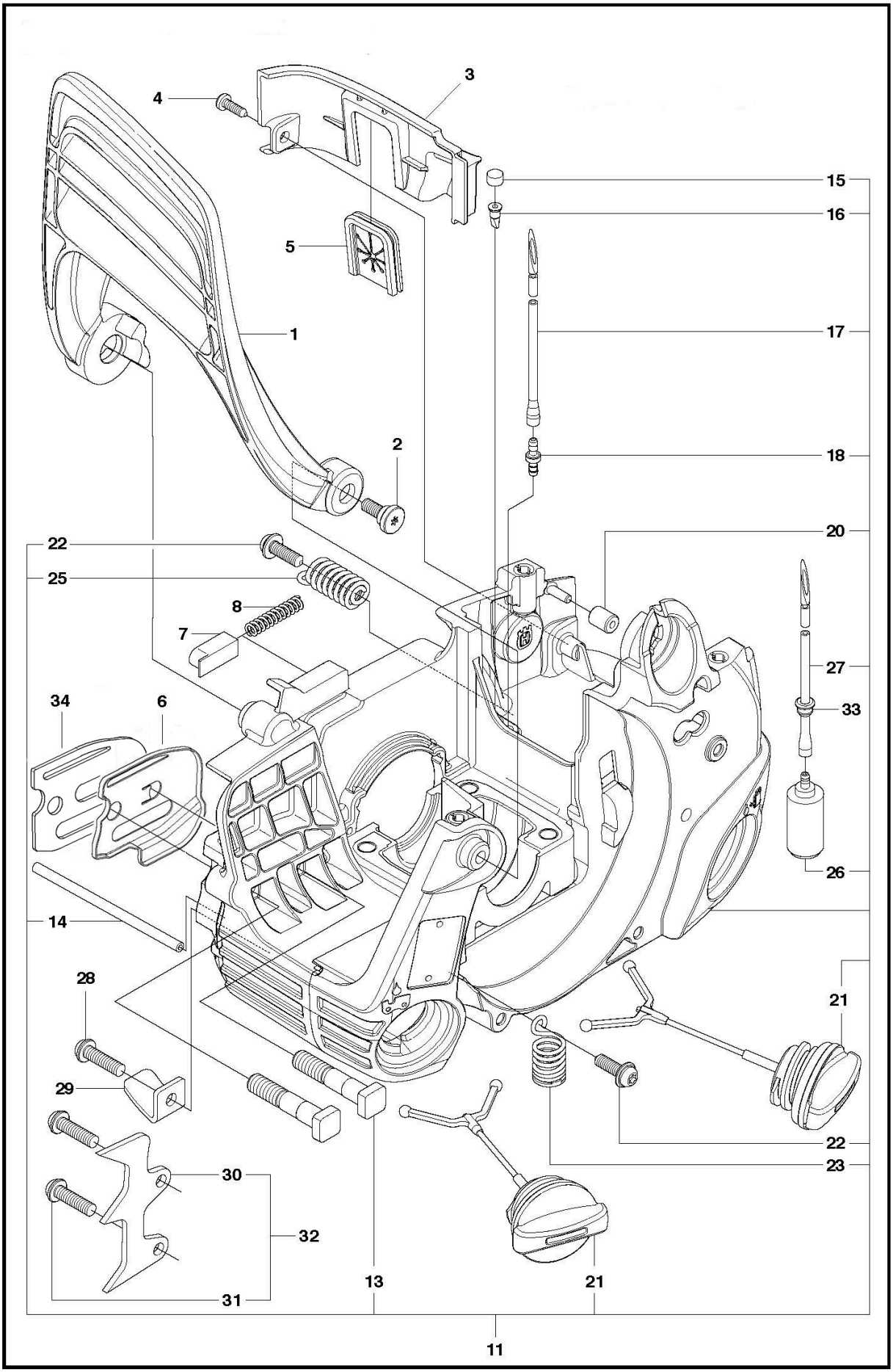
3
4
15
16
5
1
17
2
18
20
22
25
8
7
27
34
6
33
26
14
28
21
29
22
23
30
32
31
13
21
11

Reference	Artikelnummer	Varenavn	Antal	Kommentar
1	575636901	HÅNDVÆRN	1	From 20080100001 up to 20101400000
1	577611901	HÅNDVÆRN	1	From 20101400001
2	545127301	FLANGE ÖVERST	1	
3	545061201	BAGHJUL	1	
4	545227101	SCREW	1	
5	545075401	GENNEMFØRING	1	
6	545071401	SVÆRD	1	
7	545071301	CAP. SPRING HANDGUARD	1	
8	545071201	SPRING. HANDGUARD POSITION	1	
11	579665201	CHASSIS	1	
13	530015877	BOLT	2	From 20091400001 up to 20101400000
13	529310301	BOLT	2	From 20101400001
13	530016133	BOLT	2	From 20080100001 up to 20091400000
14	545033501	SLANGE	1	
15	530029868	PROP	1	
16	530026119	TILBAGESLAGSVENTIL	1	

17	530069216	BENZINSLANGE	1	From 20080100001 up to 20144000000
17	580727101	BENZINSLANGE	1	From 20144000001
18	530023877	NIPPEL	1	
20	545061901	ISOLATOR	1	
21	545070801	BENSINLOCK KPL	2	From 20080100001 up to 20101400000
21	544111203	TANKDÆKSEL KPL	2	From 20101400001
22	530015906	SCREW	2	
23	545033801	ISOLATOR	1	
25	545063101	FJEDER	1	From 20080100001 up to 20144000000
25	577540601	FJEDER	1	From 20144000001
26	530095601	BENZINFILTER	1	30 pcs, plastic bag of 530095646
26	577167201	BENZINFILTER	1	From 20091400001
26	530095646	BENZINFILTER	1	From 20080100001 up to 20091400000
27	580727101	BENZINSLANGE	1	From 20144000001
27	545078302	LINE	1	From 20080100001 up to 20144000000
27	580632317	LINE	1	From 20101400001 up to 20144000000. Use after date code 201220, Also use grommet 503735801 with this line.

28	530015814	SCREW	1	
29	530029850	KÆDEFANGER	2	
30	530038990	FELLING DOG	1	
31	530016439	SCREW	2	
32	530014381	FELLING DOG	1	
33	503735801	BUSHING	1	From 20144000001
34	592969801	AFSTANDSPLADE	1	From 20144000001

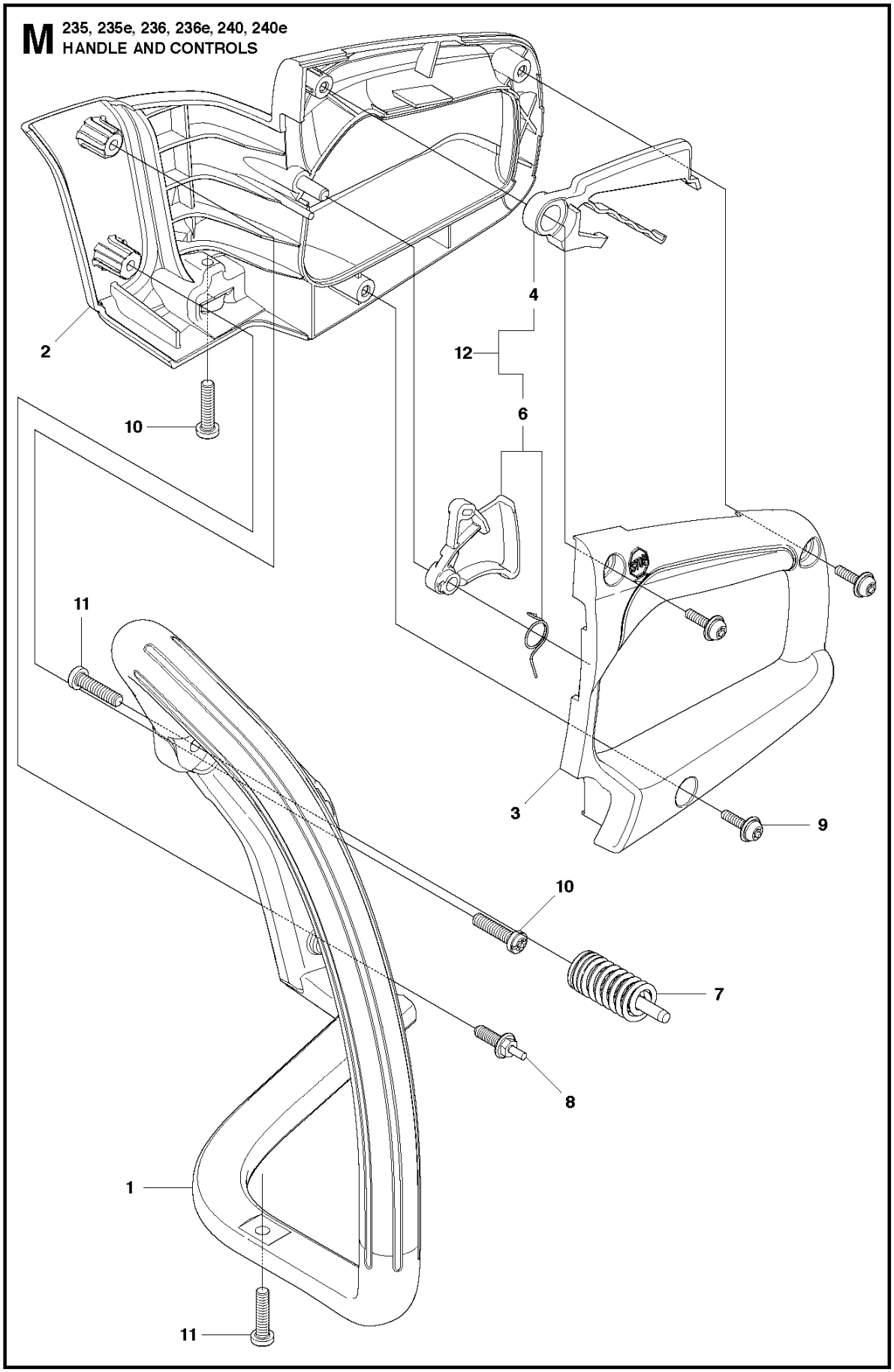
M
235, 235e, 236, 236e, 240, 240e
HANDLE AND CONTROLS
2
10
4
12
6
11
3
9
10
7
8
1
11

Reference	Artikelnummer	Varenavn	Antal	Kommentar
1	545062401	HÅNDTAG FORREST	1	
2	545062202	REAR HANDLE W/OVMLD 240E	1	
2	545062201	HÅNDTAG BAGEST	1	
3	545062302	REAR HANDLE COVER W/OVMLD 240E	1	
3	545062301	REAR HANDLE COVER 235/235E	1	
4	545062601	LOCKOUT- THROTTLE	1	
6	545121501	ASSY TRIGGER & SPRING	1	From 20080100001 up to 20091400000, from 20101400001 up to 20144000000
6	578246701	UDLØSER	1	From 20091400001 up to 20101400000, from 20144000001
7	545033901	ISOLATOR	1	
8	545076301	ISOLATION LIMITER SCREW	1	
9	530016433	SCREW	3	
10	530016349	SCREW	2	
11	530016432	SCREW	2	
12	545081013	SÆT	1	From 20080100001 up to 20091400000, from 20101400001 up to 20144000000

12	578862201	THROTTLE TRIGGER	1	From 20091400001 up to 20101400000, from 20144000001

N **235, 235e/240, 240e**
CARBURETOR DETAILS
From 20080100001 up to 20144000000

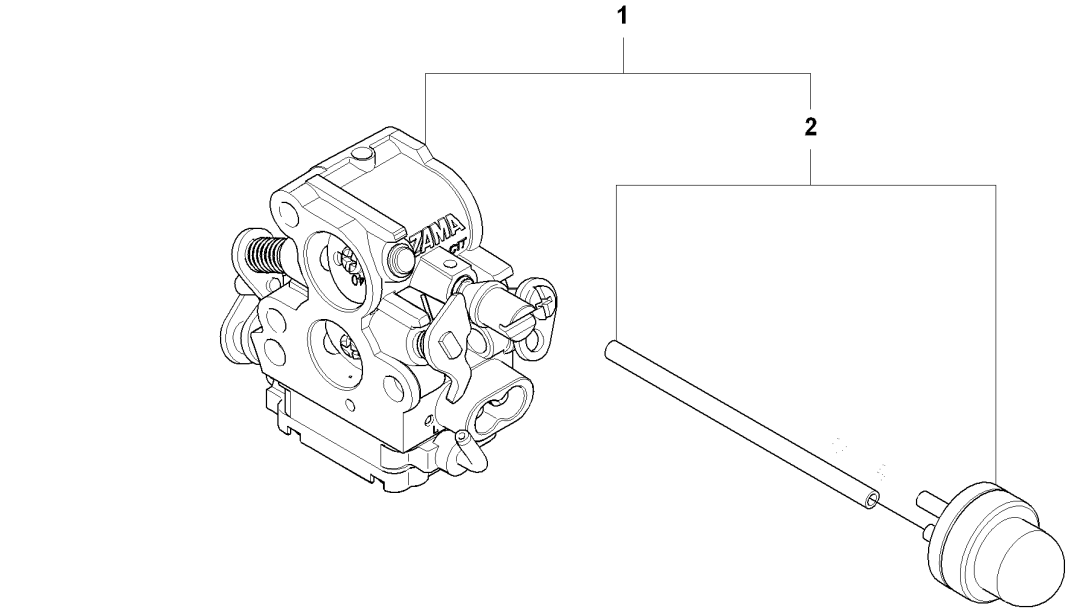

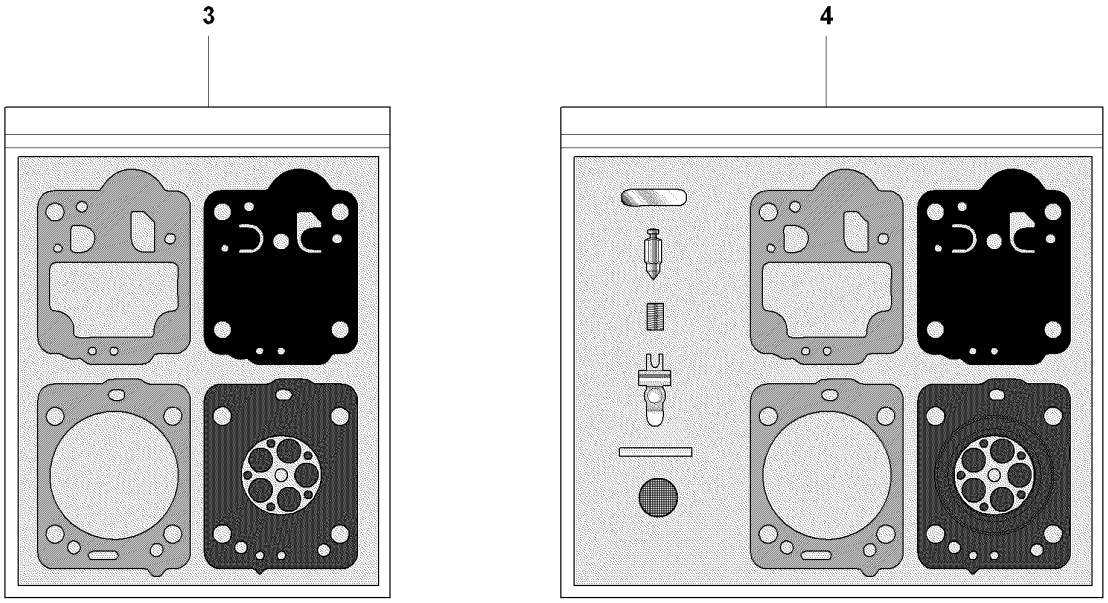

Reference	Artikelnummer	Varenavn	Antal	Kommentar
1	586936202	KARBURATOR	1	
2	545008030	PURGE	1	
3	545008031	PAKNINGSSÆT	1	
4	545008032	CARBURETTOR KIT	1	

N 235, 235e, 236, 236e, 240, 240e
CARBURETOR DETAILS

From 20144000001

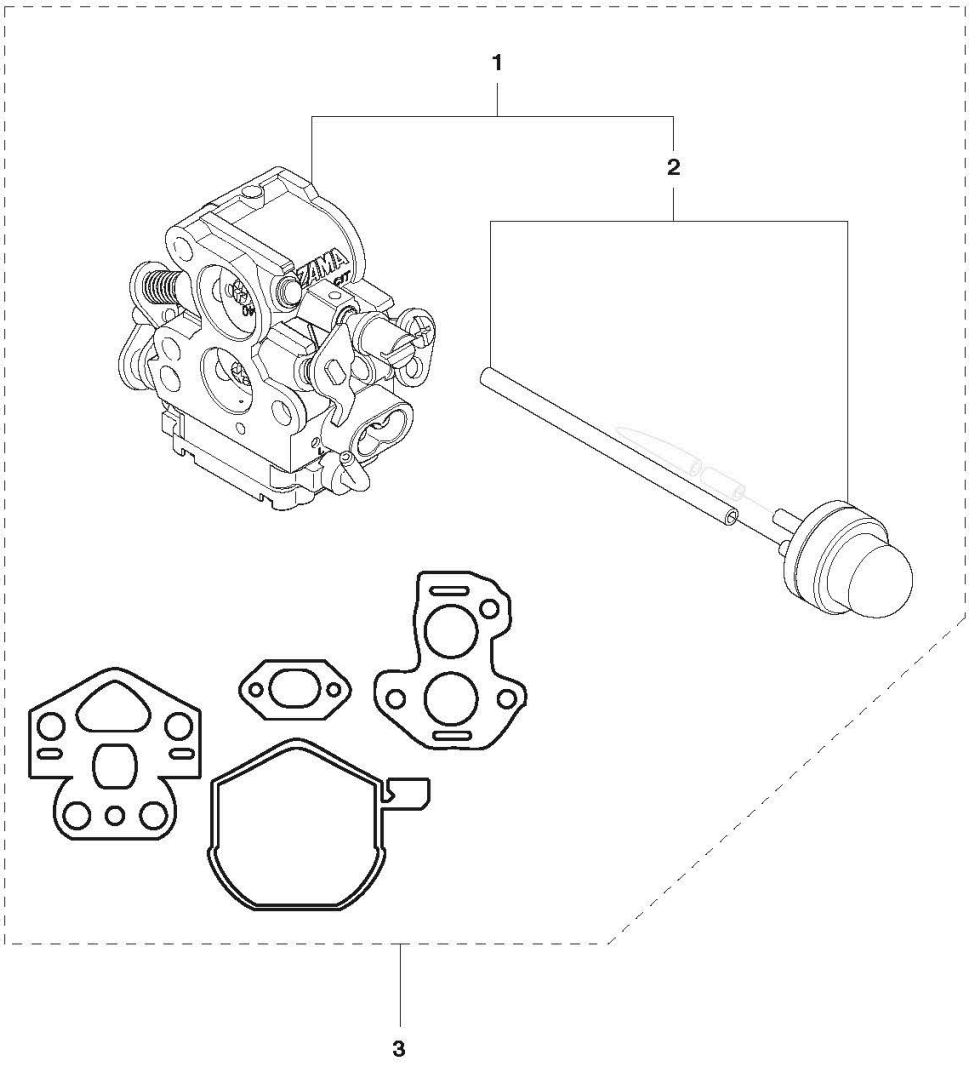

Reference	Artikelnummer	Varenavn	Antal	Kommentar
1	586936202	KARBURATOR	1	
2	545008030	PURGE	1	
3	587609701	SÆT	1	

P **235, 235e, 236, 236e, 240, 240e**
ACCESSORIES

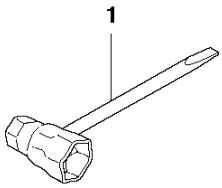

Reference	Artikelnummer	Varenavn	Antal	Kommentar
1	587465401	SKRUENØGLE	1	From 20144000001
1	587417201	SKRUENØGLE	1	From 20080100001 up to 20144000000

Q 235, 235e, 236, 236e, 240, 240e
SERVICE UPDATE

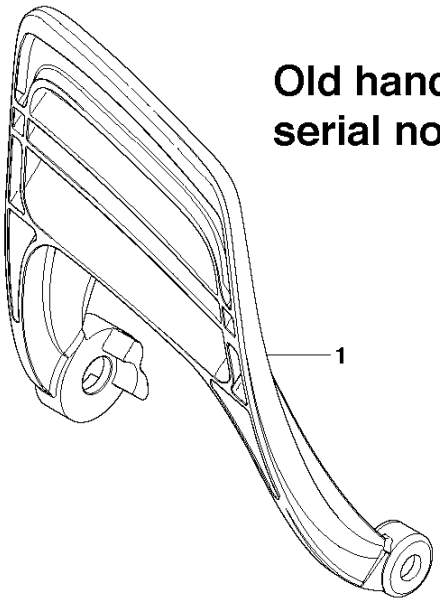

Old hand guard up to serial no. 20093899999

Reference	Artikelnummer	Varenavn	Antal	Kommentar
1	545066701	HANDGUARD	1	

K2 235, 235e, 236, 236e, 240, 240e
CRANKSHAFT
From 20144000001

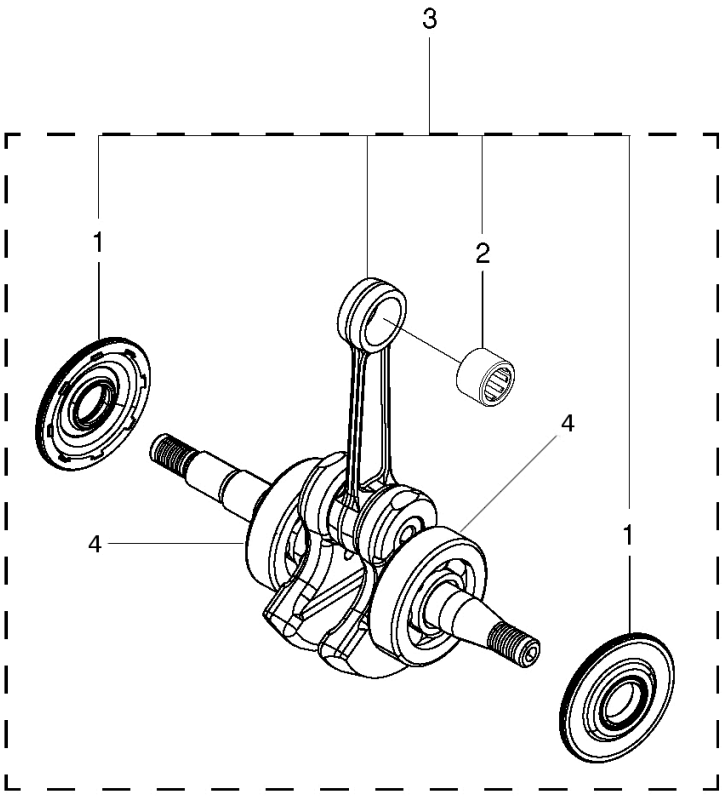

Reference	Artikelnummer	Varenavn	Antal	Kommentar
1	581608001	TÆTNING	2	
2	574449401	ASSEMBLY	1	
3	577830802	SÆT	1	CRANKSHAFT W / HARDMOUNT BEARINGS
4	585621401	LEJE	1	

J2 236, 236e, 240, 240e
CYLINDER PISTON 38CC

Type 2 Typ 2 Tipo 2

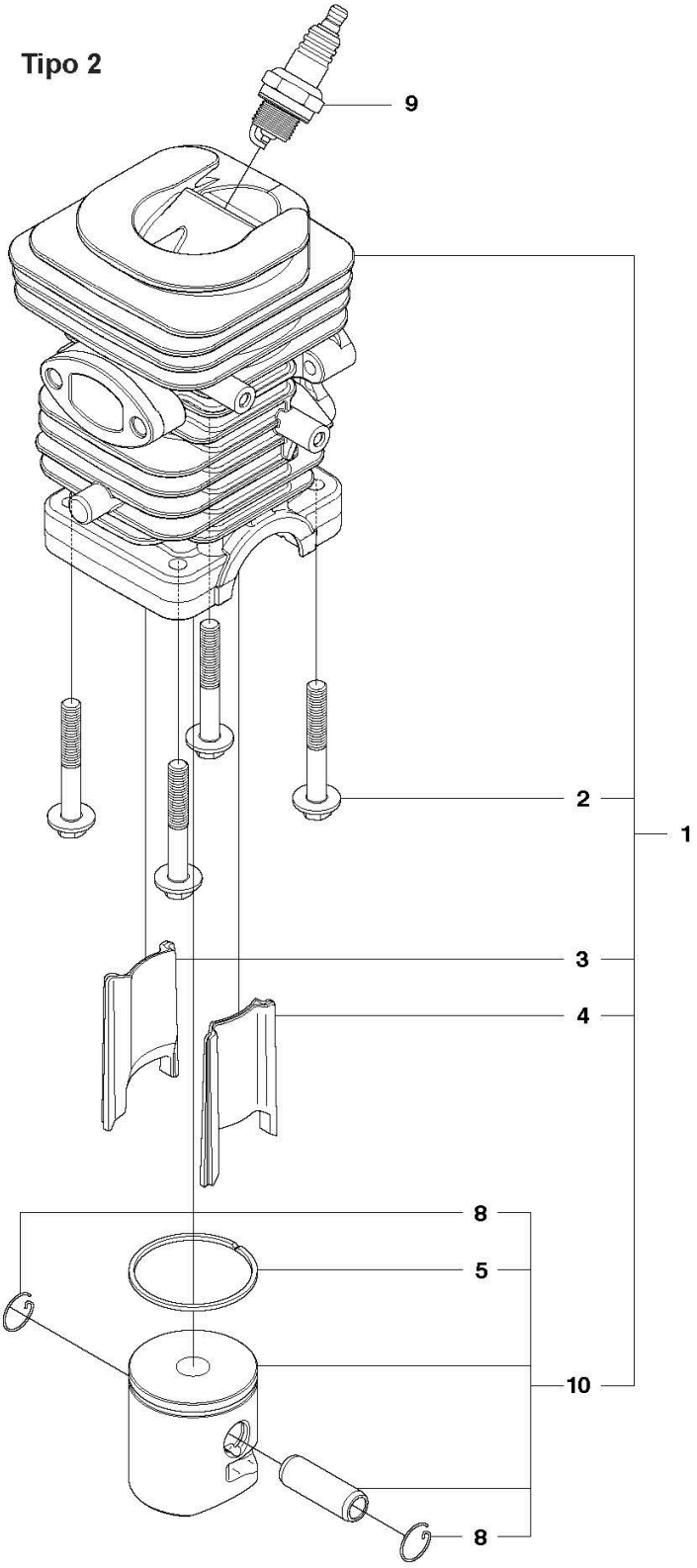

Reference	Artikelnummer	Varenavn	Antal	Kommentar
1	577831102	SÆT	1	From 20144000001. Not for US.
1	577831101	SÆT	1	From 20080100001 up to 20144000000
2	545081501	BOLT	4	
3	574190901	INDSATS	1	
4	574190801	INDSATS	1	
5	585040601	STEMPELRING	1	From 20144000001
5	530012608	STEMPELRING	1	From 20080100001 up to 20144000000
8	530015697	LÅSERING	2	
9	503235108	TÆNDRØR	1	
10	545081894	SÆT	1	

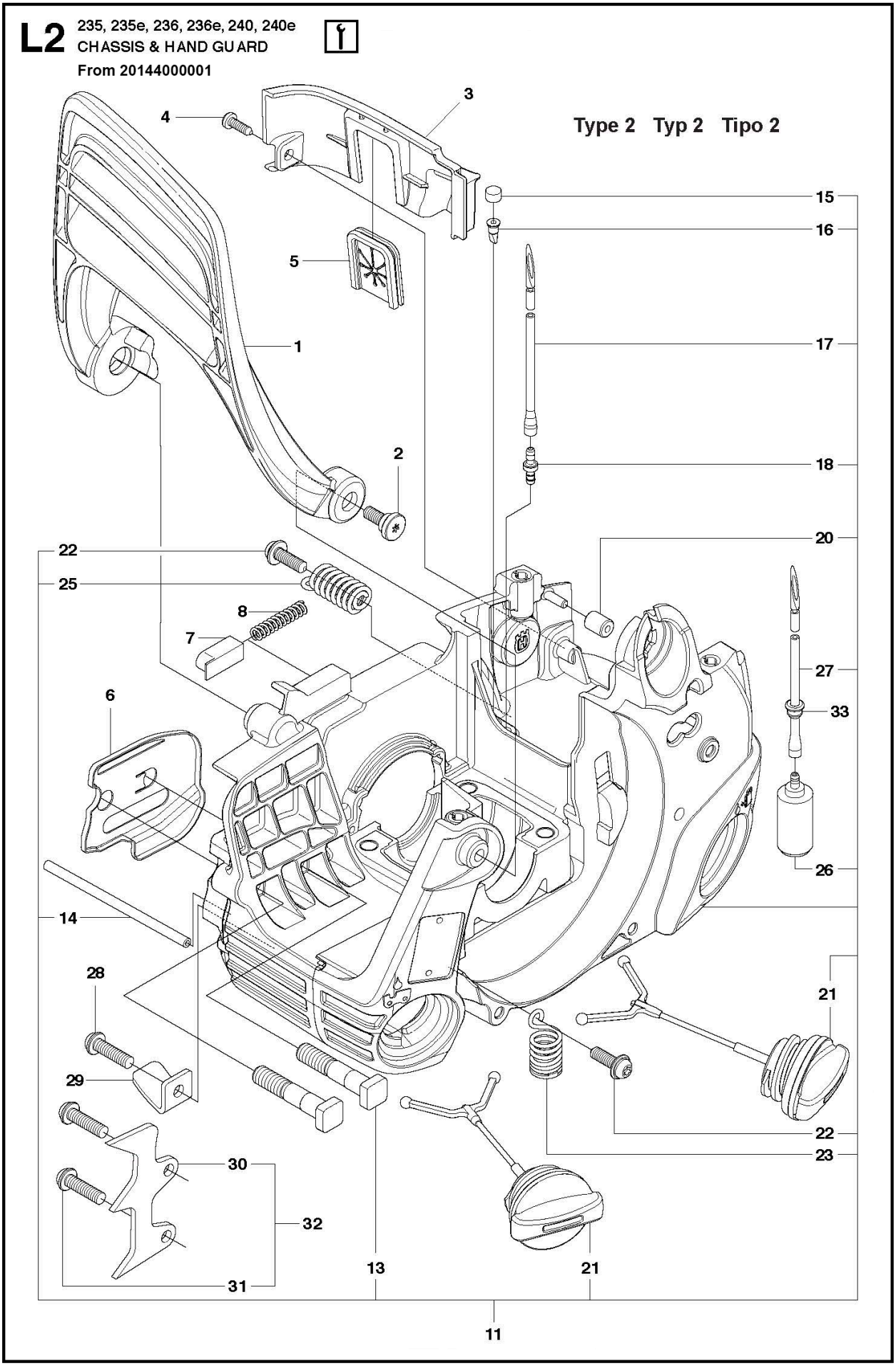
L2
235, 235e, 236, 236e, 240, 240e
CHASSIS & HAND GUARD
From 20144000001
Type 2 Typ 2 Tipo 2
1
2
3
4
5
6
7
8
11
13
14
15
16
17
18
20
21
22
23
25
26
27
28
29
30
31
32
33

Reference	Artikelnummer	Varenavn	Antal	Kommentar
1	577611901	HÅNDVÆRN	1	
2	545127301	FLANGE ÖVERST	1	
3	545061201	BAGHJUL	1	
4	545227101	SCREW	1	
5	545075401	GENNEMFØRING	1	
6	545071401	SVÆRD	1	
7	545071301	CAP. SPRING HANDGUARD	1	
8	545071201	SPRING. HANDGUARD POSITION	1	
11	587026801	CHASSIS	1	
13	529310301	BOLT	2	
14	545033501	SLANGE	1	
15	530029868	PROP	1	
16	530026119	TILBAGESLAGSVENTIL	1	
17	530021025	SLANGE	1	
18	530023877	NIPPEL	1	
20	545061901	ISOLATOR	1	

21	544111201	TANKDÆKSEL KPL	2
22	530015906	SCREW	2
23	545033801	ISOLATOR	1
25	545063101	FJEDER	1
26	577167201	BENZINFILTER	1
27	580632317	LINE	1
28	530015814	SCREW	1
29	530029850	KÆDEFANGER	1
30	530038990	FELLING DOG	1
31	530016439	SCREW	2
32	530014381	FELLING DOG	1
33	503735801	BUSHING	1